Foreword

With the ever increasing varieties of motorcycles, new structures and new techniques have increasingly been applied. To help SHINERAY users and maintenance personnel better understand the maintenance, adjustment and repair techniques of XY400B motorcycle, we prepared this maintenance manual. This manual is expected to facilitate the SHINERAY users and maintenance personnel and provide technical guidance for them.

The masterstroke of the manual is the XY400B motorcycle and the contents in Chapter 1-Chapter 3 are applicable to the adjustment of various parts of the motorcycle. Chapter 4-19 describes various constituting parts of the motorcycle respectively. Chapter 20 contains the electrical system diagram.

The standard maintenance procedures, maintenance precautions and general maintenance knowledge are not covered in this manual. Any user or maintenance personnel who needs the above information may refer to the related materials

All materials, charts and various data, as well as performance indices referenced herein, are for the latest model in our product family at the date this manual is printed. SHINERAY Co., Ltd. Shall have the right to, at any time, amend this manual without prior notice. The copyright of all parts of this manual belongs to China SHINERAY Co., Ltd. and no units or individuals are allowed to reprint it the without consent of our company.

We hope you will enjoy the comfort and pleasure it brings to you during your driving

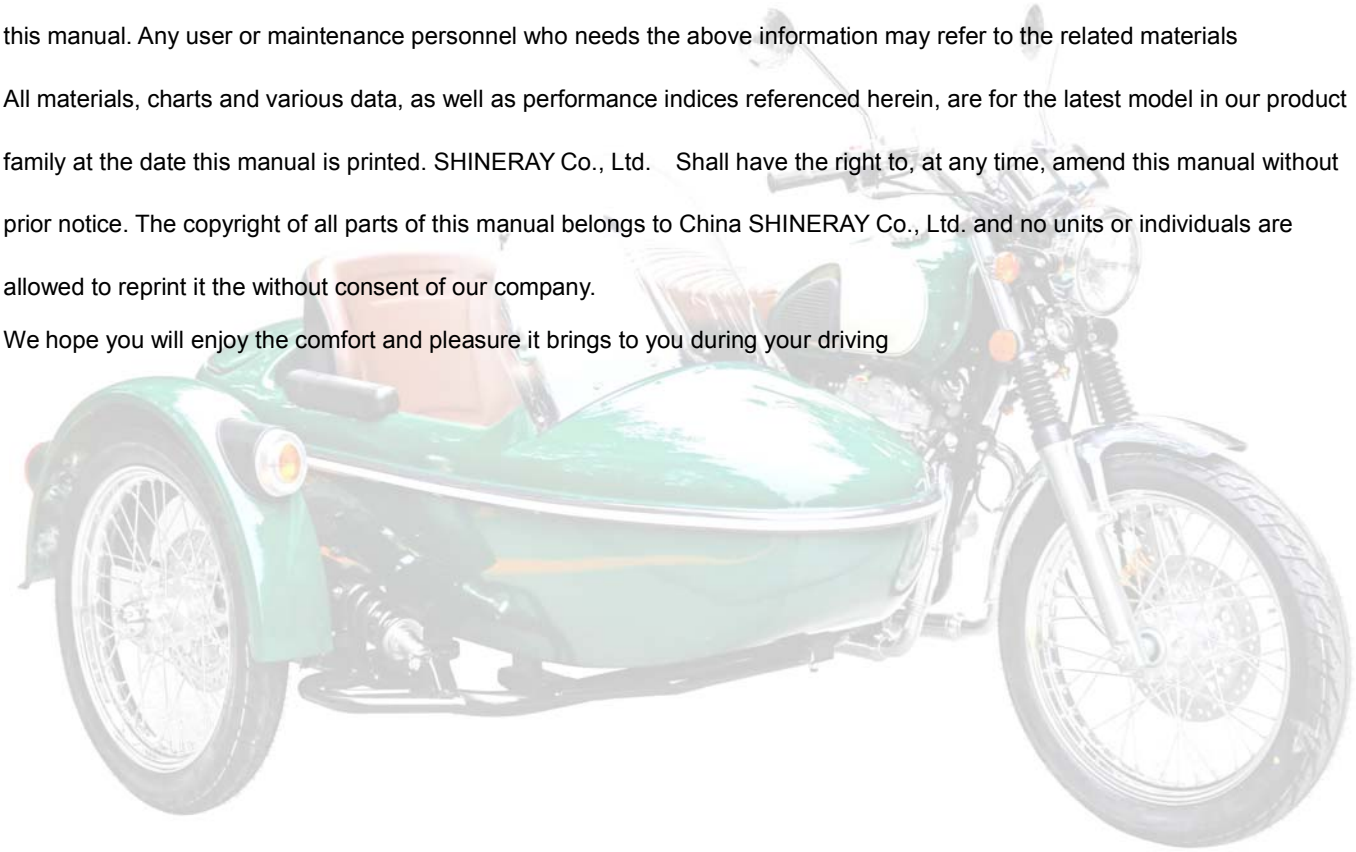

Contents

Overview	1. Overview	1-12
	2. Lubrication system	13-20
	3. Inspection and adjustment	21-39
Engine	4. Fuel system	40-46
	5. Removal and installation of engine	47-51
	6. Cylinder head, cylinder and piston	52-65
	7. Clutch and Right crankcase cover	66-75
	8. Magneto and starting system	76-84
	9. Crankcase, crankshaft and Shift mechanism	85-101
Vehicle body	10. Frame and exhaust system	102-109
	11. Front wheel, front overhang and steering stem	110-124
	12. Rear wheel and rear overhang	125-135
	13. Basket wheel, basket bucket, basket rack	136-141
Electrical system	14. General remarks of electrical system	142-143
	15. Power supply system	144-146
	16. Starting system	147-150
	17. Illumination signal system	151-157
	18. Electrical starting control system	158-164
	19. Engine management system	165-180
	20. Electrical System Diagram	181

1. Overview

Engine Number Position	Bar Tool
About Motorcycle Maintenance	Maintenance Period Table
Technical Data of Main Performance	Symbol Descriptions
Standard Torque Values	

Engine Number Position

Photo of Complete Vehicle:

Frame Number Position:

Engine Number Position

Maintenance Precautions

1. Whenever reassembling after being disassembled, replace new washers, sealing members, etc.

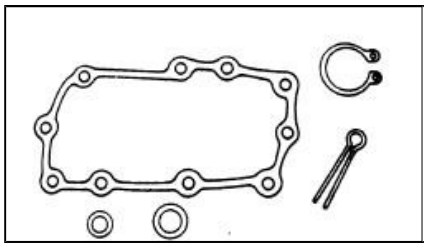

2. While fastening bolts or nuts, proceed in diagonal crossing sequence to gradually screw down to the required torque for 2 to 3 tries.

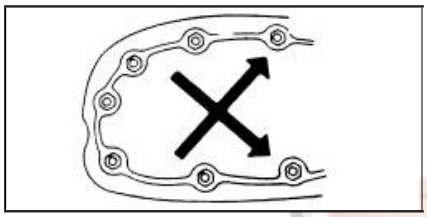

3. After being disassembled, the parts and components should be cleaned before being inspected and measured

To clean the spare parts, use only the cleaning fluid that is incombustible or has high ignition point.

Before reassembling, apply the specified lubricating oil to the sliding surface of the parts and components.

After reassembling, check whether all the spare parts are mounted properly by means of turning, moving and operating them.

4. To disassemble and assemble a motorcycle, special service tools (SST) and general-purpose tools must be used in accordance with relevant regulations.

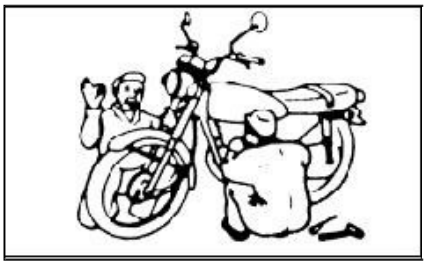

5. The specified or equivalent lubricating grease (oil) must be applied to or refilled into the specified locations.

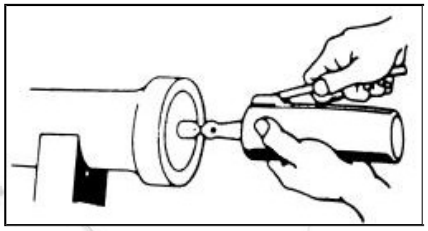

6. When 2 or more persons are carrying out the operation, they shall work with each other and pay attention to

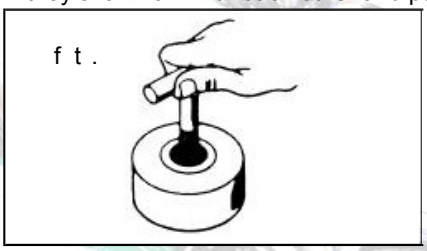

7. Before operating, always remove the negative (-) end of the battery first and take care to prevent the wrench or the like from touching the frame. After operating, reconfirm all the connections, fixings and junctions. If the battery is already removed, connect the positive (+) end first.

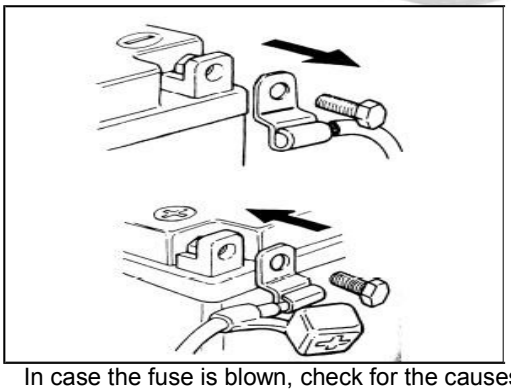

8. In case the fuse is blown, check for the causes and, after being repaired, replace corresponding fuse as per the specified capacity.

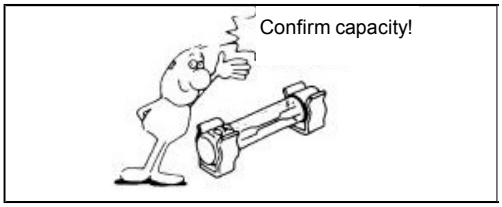

9. The caps must be securely put on the terminals after the operation is complete

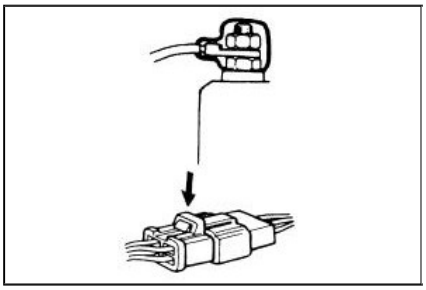

10. While disassembling a connector joints with lock, release the lock before proceeding with operation.

While disassembling a connector joints, hold the connector body without pulling the wire harness.

Before connecting the connector, the terminals shall be free from breaking or bending. Make sure the terminals are not too long or are falling off.

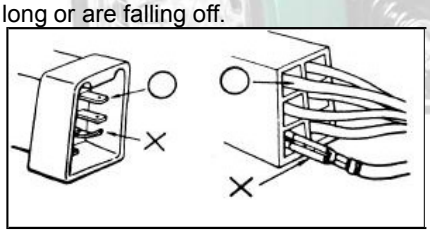

The connector shall be fully inserted in place.

For a connector with lock, confirm whether the lock is completely fixed.

Make sure the harness is not falling off

Make sure the plastic jacket of the connector is securely covering the connector without scaling off.

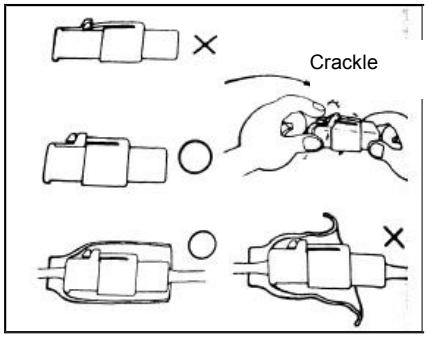

11. Before connecting a connector, make sure the sleeve is not broken and the opening of the intermediate terminal is not too large

The joint shall be fully inserted in place.

Make sure the plastic jacket is housing the terminal completely.

The opening of the plastic jacket shall not face up.

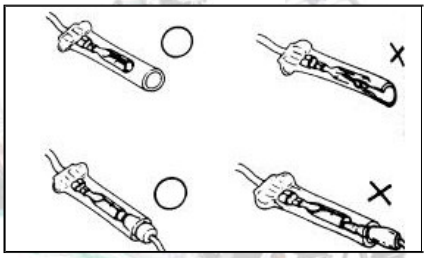

12. The harness fixing strap shall firmly button the specified position on the frame.

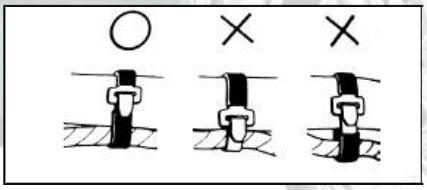

13. The clamp shall reliably bite the wire harness

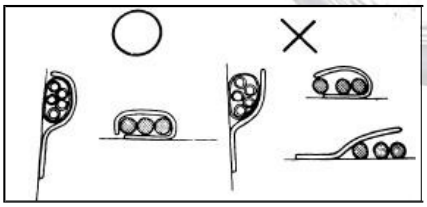

In case of a welded clamp, it shall not bite the wire harness towards the weld mark

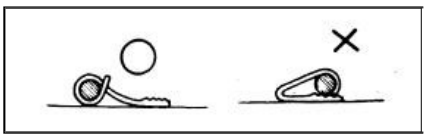

The wire harness shall be clamped at the position without contacting a rotating part or a removing element.

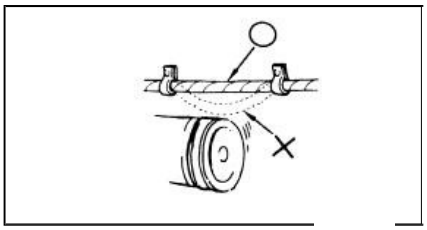

The wire harness shall be clamped at the position without contacting a part that generates high temperature.

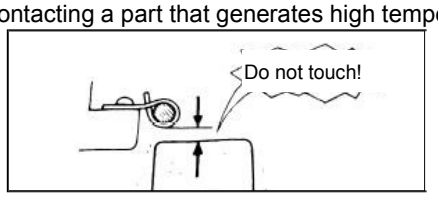

The wire harness shall be clamped at the position without contacting the edge or sharp corners of the vehicle body.

The wire harness shall be incapable of passing through the position contacting a bolt, a screw head or any front part.

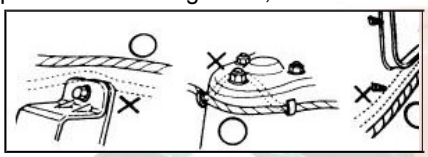

The wire harness shall not be slackened or be forcibly pulled.

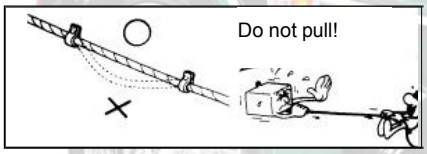

If the wire harness has to contact the edge or sharp corner parts, the contacting part shall be protected with hose or adhesive tape.

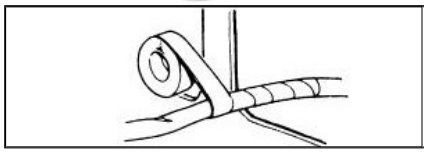

In case of a wire harness with garland, it shall be reliably harnessed.

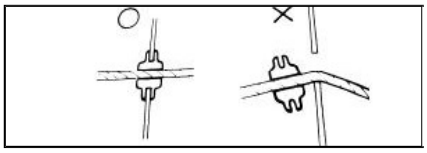

Do not damage the garnish of the wire harness.

Once the wire harness is damaged, repair it by coiling with plastic adhesive tape.

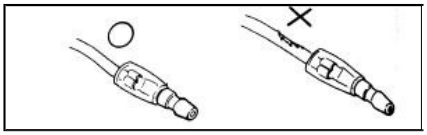

While mounting parts and components, do not press the wire harness.

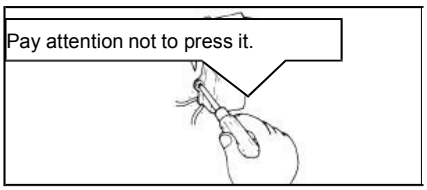

Do not mount wire harness with it twisted.

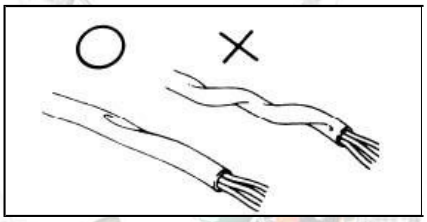

14. When wiring, note when turning it leftwards or rightwards to the limit position, the wire harness shall not be tightened up or slackened, and make sure there is no significant bending, pressing, intervening of marginal parts.

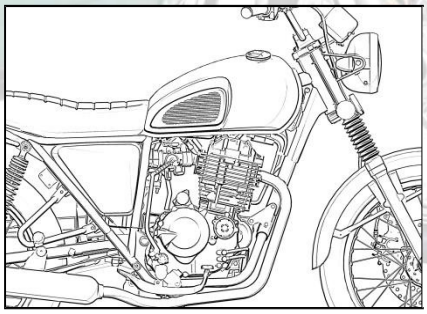

15. While using the test table, operate according to the maintenance manual after understanding the explanations in the instruction manual.

16. Do not drop or throw the parts and components.

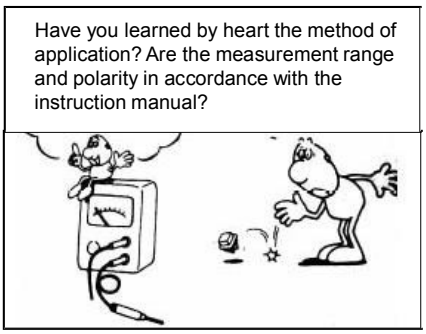

17. In case of rust on the terminals, carry out connection operation after disposing it with abrasive paper, etc.

18. Do not forcibly twist or forcefully bend the cable. Because a deformed or damaged cable is the cause of bad operation and damage.

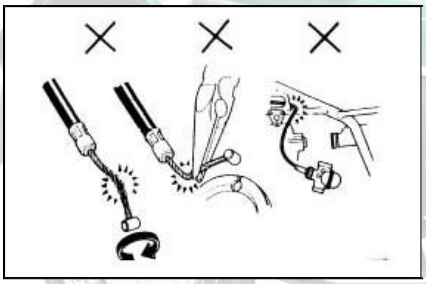

Technical Data of Main Performance

	Item	Data
Dimension & Weight	Length	2160mm
	Width	1610mm
	Height	1130mm
	Wheelbase	1420mm
	Wheelbase basketcar	1170mm
	Min. ground clearance	160mm
	Complete vehicle weight	Non-loaded weight: 260kg, Curb weight: 485kg,
Vehicle body	Frame type	Cradle type
	Rake angle	28°
	Front suspension device	spring & hydraulic composite damping
	Rear suspension device	spring & hydraulic composite damping
	Front Tire size	100/90-19
	Rear Tire size	130/80-18
	Basket Tire size	100/90-19
	Front wheel pressure	Normally loaded: 280 kPa,
	Rear wheel pressure	Normally loaded: 280 kPa,
	Basket wheel pressure	Normally loaded: 280 kPa,
	Front brake	Single disc type ModelΦ276
	Rear brake	Single disc type ModelΦ160
	Basket brake	Single disc type ModelΦ276
	Fuel tank volume	13L
	Fuel grade	93#

Engine	Mode	single-cylinder Oil –cooling 4-stroke engine
	Cylinder bore × Stroke	85.0mm × 70.0mm
	Cylinder displacement	397cc
	Compression ratio	8.8±0.2:1
	Max. power	20.4kw/6500rpm
	Max. torque	30.6N.m/5000rpm
	Valve clearance (cold)	IN: 0.07-0.10；EX: 0.08-0.12
	Valve driving gear	Chain drive
	Air filter	Oilpaper filter
	Cooling method	Oil-cooling
	Lubrication method	Please apply Shell 15W/40-SF engine oil in summer and 10W/30-SF in winter
	Engine oil charge volume	2.2L
	Engine oil filter element	Oilpaper filter
	Electric motor starting	Electric
	Idle speed	1600±100r/min
	Net weight of engine	40kg

Driving system	Clutch	Wet clutch, coil clutch, paper friction wafer
	Clutch operating system	Manual mechanical
	Variable speed gear	5-speed constant mesh
	Primary reduction ratio	2.666
	Transmission gear ratio	Ⅰ 2.615 Ⅱ 1.789 Ⅲ 1.350 Ⅳ 1.120 Ⅴ 0.892
	Final reduction ratio	2.533
	Gear shifting mode	Left foot operated to and back type Sequence: Ⅰ－N－Ⅱ－Ⅲ－Ⅳ-V

Electrical system	Electric generator	Permanent magnet DC magneto
	Accumulator capacity	12V9A.h
	Power supply system	DC power supply, and the electric generator is only used to recharge the accumulator
	Fusible cutout	15A/10A
	Spark plug	DPR8Z
	Spark plug gap	0.6-0.7mm
	Ignition coil type	Open magnetic circuit
	Fuel supply mode	Electronically injection, ECU control
	Ignition mode	EMS
	Ignition advance angle	EMS
	Ignition timing	EMS
	Front lamp	12V/55W/60W
	Turn lamp	Front: 12V10W Rear: 12V10W
	Taillight/Brake signal light	12V21W/5W
	Position indicator	Front: 12V5W Rear: 12V5W Basketcar: 12V5W

Standard Torque Values

ENGINE

Item	Quantity	Thread diameter (mm)	Torque value (N.m)	Thread locker
Cylinder head cover connecting bolt	13	8	8 ~ 12	
Cylinder bolt	4	10	40 ~ 50	
	2	6	8 ~ 12	
Valve adjusting screw nut	4	10	8 ~ 12	
Timing driven sprocket bolt	2	7	7 ~ 11	
Rocker-arm shaft cover	2	14	24 ~ 28	
Magneto flywheel fastening nut	1	12	38 ~ 45	
Clutch fastening nut	1	18	114 ~ 126	LOCTITE 243
Primary driving gear fastening nut	1	18	143 ~ 157	LOCTITE 243
Oil drain plug	1	12	28 ~ 32	LOCTITE 243
Crankshaft, main-shaft bearing baffle screw	5	6	8 ~ 12	
Stud	1	6	8 ~ 12	LOCTITE 648
Stud	4	10	40 ~ 50	
Exhaust valve stud bolt	2	8	10 ~ 14	
Stator connecting bolt	3	6	8 ~ 12	
Stator leads pressure plate bolt	2	6	8 ~ 12	LOCTITE 243
Spark Plug	1	12	18 ~ 25	LOCTITE 648
Pensioner plate fastening bolt	1	6	7 ~ 10	LOCTITE 648

Vehicle body

Item	Quantity	Thread diameter (mm)	Torque value (N.	Thread locker
Front wheel spindle	1	14	50 ~ 60	
Front vibration damper plate	1	10	30 ~ 40	
Real wheel spindle nut	1	16	60 ~ 90	
Rear fork shaft nut	1	14	50 ~ 60	
Engine hanging bolt	3	10	30 ~ 40	
	4	8	20 ~ 30	
Steering handle set bolt	4	8	20 ~ 30	
Front fork vertical pipe cap nut	1	22	60 ~ 90	
Lower connection plate set bolt	2	10	30 ~ 40	
Upper connection plate set bolt	2	6	8 ~ 12	
Rear sprocket nut	6	8	20 ~ 30	
Brake disc fastening nut	8	8	20 ~ 30	LOCTITE 243
Speed signal panel screw	4	8	20 ~ 30	LOCTITE 243
Front brake caliper screw	2	8	20 ~ 30	LOCTITE 243

In addition to the torque values of the important parts as listed above, the torque values for other standard fasteners are as follow:

Name and dimensions	Torque value (N.m)
5mm bolt & nut	4.5 ~ 6
6mm bolt & nut	8 ~ 12
8mm bolt & nut	18 ~ 25
10mm bolt & nut	30 ~ 40
12mm bolt & nut	50 ~ 60
5mm Screw	3.5 ~ 5
6mm Screw	7 ~ 11
6mm spool bolt & nut	10 ~ 14
8mm spool bolt & nut	20 ~ 30
10mm spool bolt & nut	30 ~ 40

Bar Tool

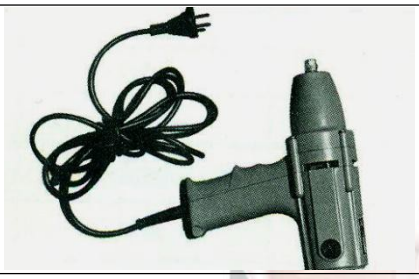	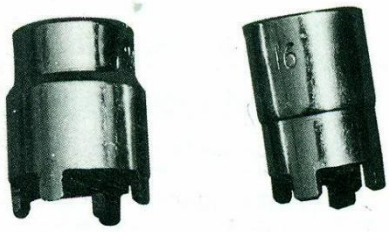
Motorized gun: special power tool for mantling/ dismantling bolt and nut	Pawl socket: for mantling/dismantling oil filtering element nut and clutch nut
	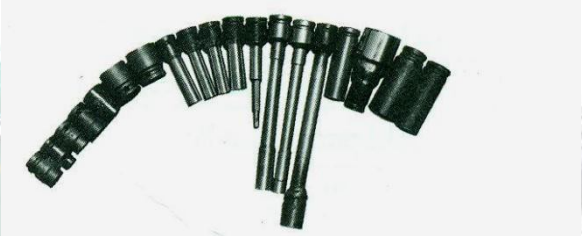
A and B bolt socket: for mantling/dismantling A and B bolt and exhaust muffler bolt Adaptor: electric special tool for cross,hexagon gun tip Valve adjusting socket: for valve clearance adjustment	Socket: for mantling/dismantling nuts and bolts
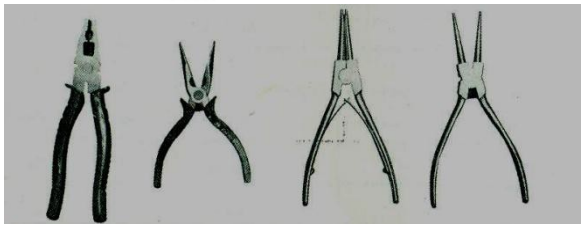	
Cutting plier, Nipper plier, expansion plier: for mantling/ dismantling flexible retainer	T-socket wrench

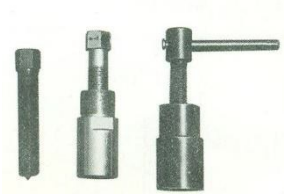	
Magnetic generator rotor puller: for dismantling magnetic generator rotor	Rubber hanner, Iron hammer, Copper hammer
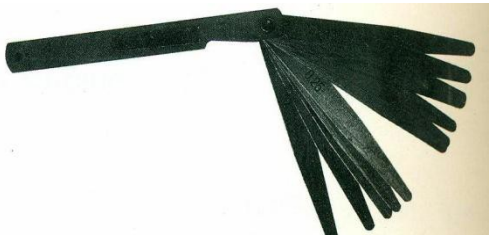	
Feeler gauge: to measure the clearance of piston, cylinder, valve, etc.	Micrometer: to measure the dimensions of piston, piston pin, etc.
Dial gauge: to measure the wheel bouncing, cylinder inner diameter, etc.	Cylinder barometer: to measure the cylinder pressure
	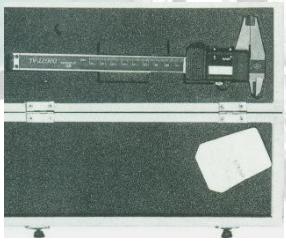
Wrench: measure tightness of ad bolt	Vernia caliper: measure size of rear wheel hub internal diameter
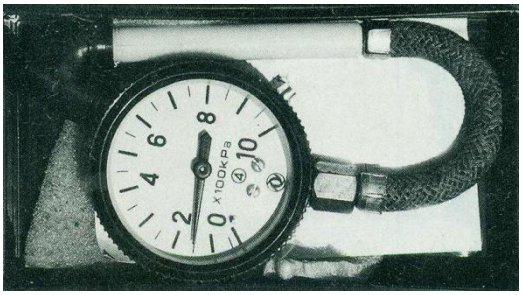	
Tire barometer: to measure the tire pressure	

Maintenance Period Table

Maintenance times / Maintenance Items	Period	Odometer km (Remark 2)				Remarks
		1000 k m	4,000 km	8,000 km	12,000 km	
* Fuel system passage			I	I	I	
* Throttle operating system		I	I	I	I	
* Throttle valve body		I	I	I	I	
Air filter element	Remark 1		C	C	Replace every 12,000km driving	
Spark Plug			I	I	Replace every 12000km driving	
Engine lubricant oil		For a motorcycle, change every 1000km, and then change it every 2000km driving				
Oil filter		R	Replace every 12,000km driving			
* Tensioner	Remark 3	I	I	I	I	
Both intake and exhaust	Remark 3	I	Check every 4,000km driving			
Clutch		I	I	I	I	
*Driving chain		Proceed with I and L for every 500km driving				
**Front and rear brake system		I	I	I	I	
** Brake Pad		I	I	I	I	
** Brake fluid		Change every 2 years				
*Front and rear brake lamp switch		I	I	I	I	
*Accumulator	Monthly	I	I	I	I	
*Suspension system		I	I	I	I	
*Nut and bolt fastening		I	I	I	I	
** Wheel & tire		I	I	I	I	
** Steering column bearing		I	I	I	I	
** Steering backstay cable	Inspect every 5000km driving and replace every 10000km driving					

Maintenance shall be carried out to the motorcycle in a specified period. The meanings of various symbols in the list are as follows: **I:**Carry out inspection, cleaning, adjustment, lubrication or replacement.

C: Cleaning. **R:** Replacement. **A:** Adjustment. **L:** Lubrication.

* This item is subject to maintenance by persons from SHINERAY Service Station. If the user has special service tools, maintenance accessories or maintenance ability, it can repair it by itself.

** To ensure safety, this item is only subject to maintenance by persons from SHINERAY Service Station.

Remarks:

① While driving in a dusty area, it shall be cleaned more often.

② When the odometer reads more than the given maximum value, its maintenance period shall still repeat as per the mile interval as stipulated in the table.

③ To ensure safety, the adjustment of timing chain and valve clearance shall only be carried out by persons from SHINERAY Service Station.

Symbol Descriptions

Meanings of various symbols in this manual:

NEW	Each time reassembled after being removed and disassembled, it must be replaced with a new one.
S TOOL	Use special service tools (SST)
O P TOOL	Use general-purpose tools.
50	Tightening torque of 50 N.m.
OIL	Use suggested engine oil.
Mo OIL	Use the mixtures of engine oil and molybdenum disulfide
LOCK	Use thread locker.
SEAL	Use sealant.
Li	Use lithium base grease.

	Measures to be prompted during operating, inspecting and maintaining.
	Special instructions or disposal measures given to prevent motorcycle from being damaged.
	Special instructions or measures given to avoid serious damages or personal injuries.

2. Lubrication system

Maintenance notice	Inspection of lubricating oil
Troubleshooting	Replacement of lubricating oil
Lubricating Position of Complete Vehicle	Cleaning of Lubricating Oil Strainer
Lubrication of Control Lines	Cleaning and Replacement of Lubricating Oil Filter
Engine Lubrication System Diagram	Oil Pump

Maintenance notice

This section introduces the inspection and replacement method of engine lubricating oil as well as the cleaning method of lubricating oil strainer and lubricating oil filter. It also introduces various lubricating positions of the complete vehicle of this model. As an important factor that influences the engine's performance and life span, the lubricating oil must be selected as per regulations; ordinary engine oil, gear oil, vegetable oil, etc. are not allowed to be used instead of it. This engine was filled with gasoline engine oil of 10W/40EG grade when leaving factory for sale. If you want to use other lubricating oil, its quality scale must reach Grade SG, and its viscosity shall be selected according to the accompanying diagram depending upon region and air temperature changes. While replacing lubricating oil, fully discharge the original lubricating oil in the crankcase and clean it up with washing kerosene, and then refill fresh lubricating oil as per regulations.

The lubricating oil inbasket the engine must be fully discharged before inspection and cleaning.

Technical specifications: Lubricating oil charge volume: 1.8L

Oil pump flow rate: 10L/min (when engine speed is at 4000 rpm).

Tightening torque of oil drain plug:28-32N.m

Selecting viscosity as per temperature conditions

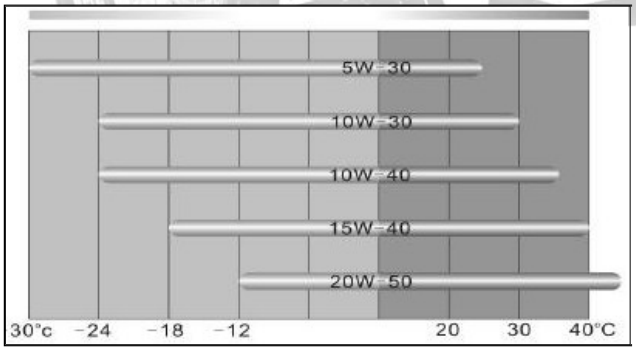

WARNING:

Repeatedly contacting the engine lubricating oil for a long period may cause skin cancer. Although such possibility is small when you deal with used engines oil every day, Care must be taken to fully cleanse your hands with soap and water after dealing with the used engine oil. Children are strictly prohibited from getting near to it.

Troubleshooting

- **Lubricating oil contaminated**
  1. Fail to replace lubricating oil according to the maintenance period table;
  2. The pouring orifice thread is damaged thus causing poor seal;
  3. The piston ring is worn.
- **Lubricating oil pressure low**
  1. The oil level is too low;
  2. Oil through, orifice port or oil strainer is clogged;
  3. Oil pumps failure.
- **Lubricating oil consumes too fast**
  1. There is leakage with the engine;
  2. The piston ring is worn.
  3. The inlet/exhaust valve guide is worn;
  4. The oil shield is worn or damaged.

Lubricating Position of Complete Vehicle

Among the positions shown in the above diagram, bebaskets applying dedicated lubricating oil for chain to the driving chain, apply lithium base grease to all other positions.

All lubricating oils not specified for use in this manual shall be ordinary common lubricating oil.

All sliding surfaces and cables not shown in this diagram shall be coated with lubricating oil or lubricating grease.

Lubrication of Control Lines

Regular lubrication shall be carried out to the clutch control line, throttle control line and steering cable. To do this, remove the upper joining parts of all control lines, sufficiently lubricate and maintain their hoisting cables and all points of support with lithium base grease.

Engine Lubrication System Diagram

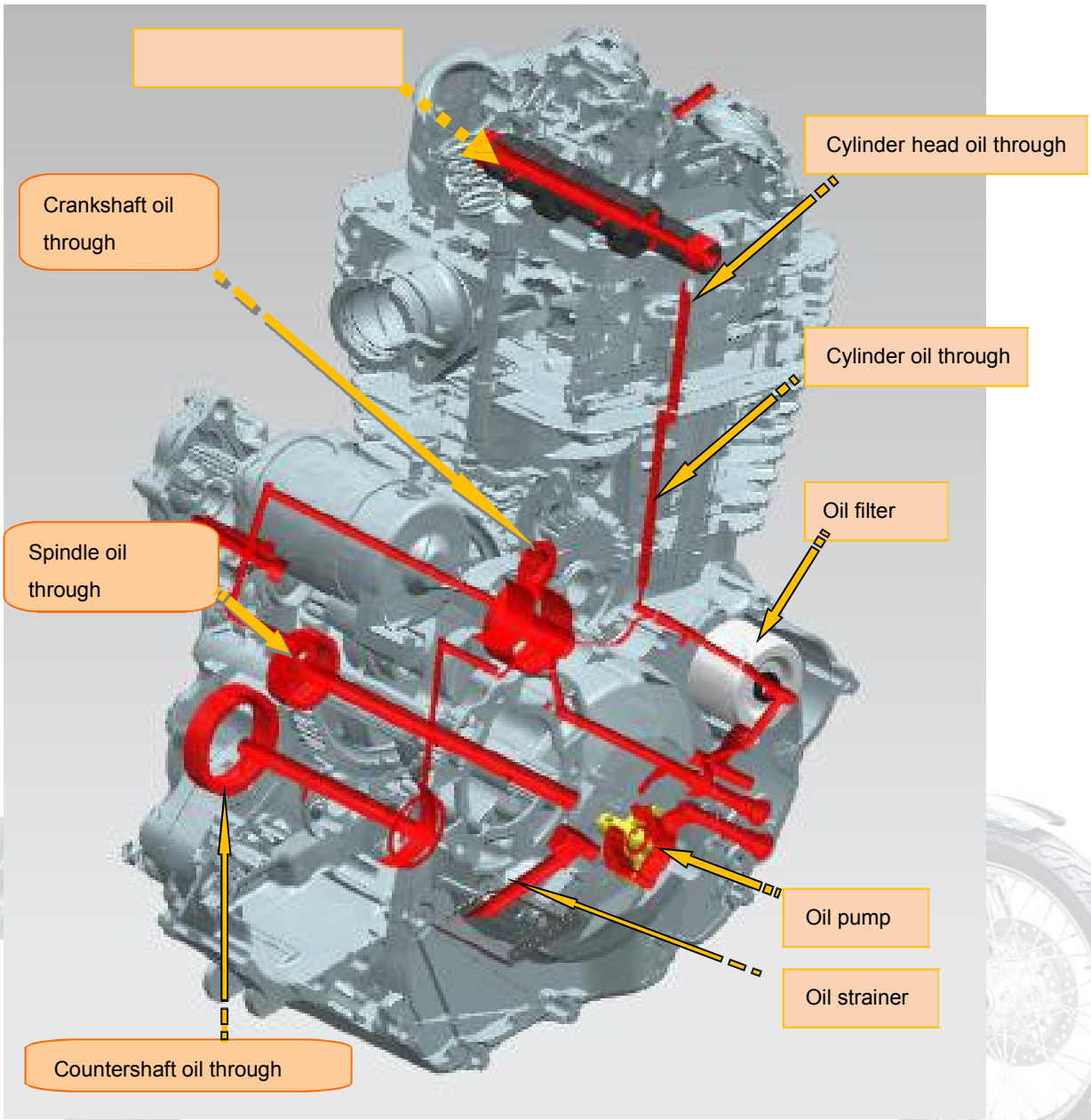

Right crankcase body oil through

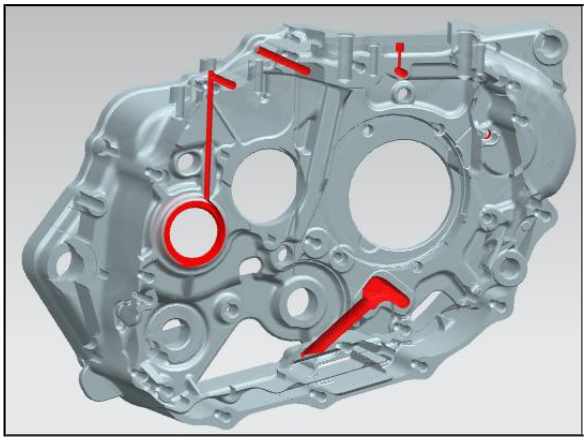

Right crankcase cover oil through

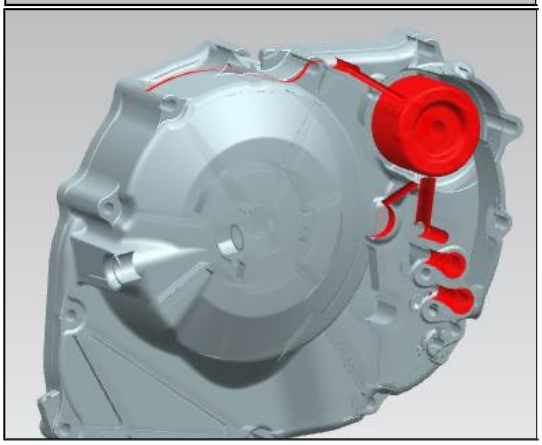

Left crankcase body oil through

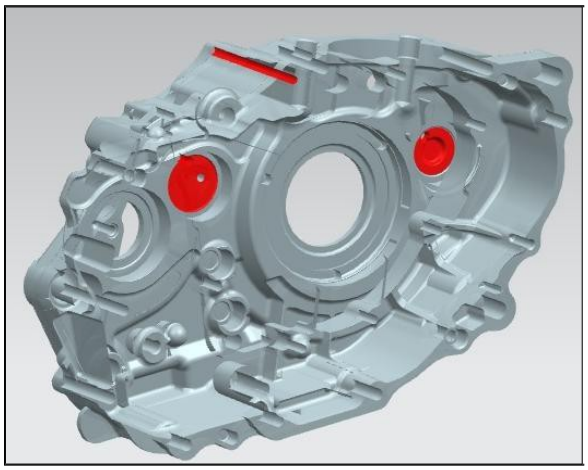

Cylinder block, cylinder head, camshaft bearing seat and a camshaft oil through

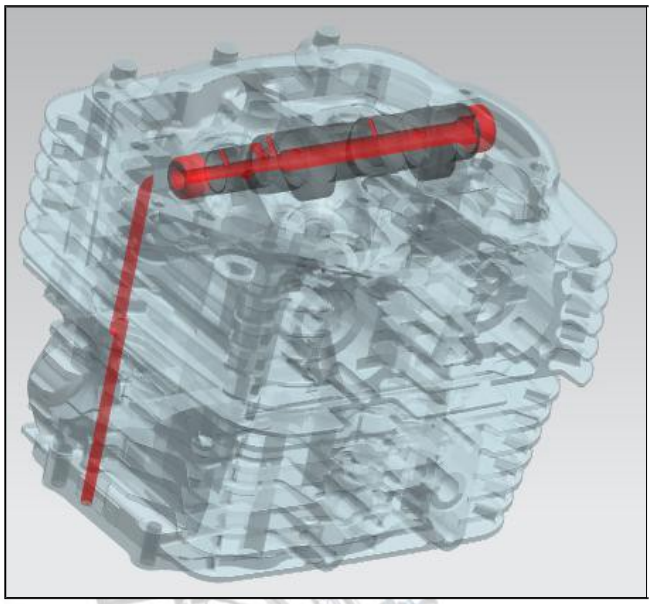

Inspection of lubricating oil

Park the motorcycle on a flat surface, look over the engine oil dipstick on the oil pot, if the engine oil level is under the lower scale line, refill the recommended lubricating oil until the oil level reaches the upper-middle limit。

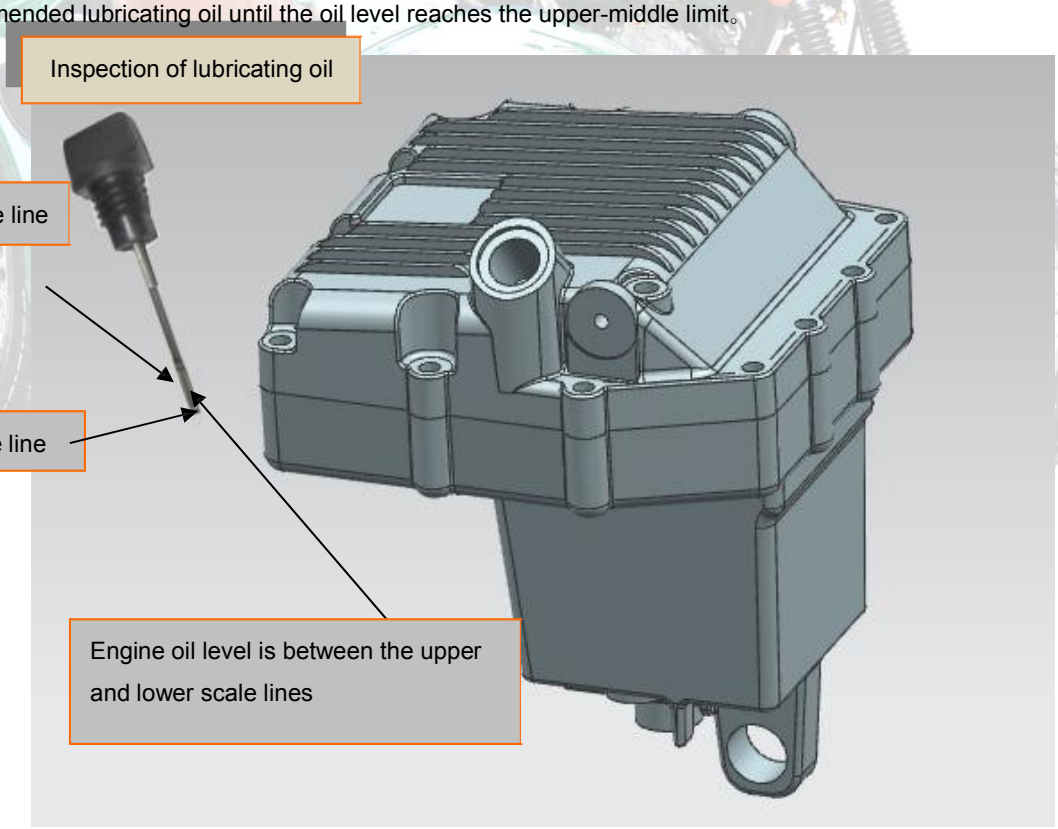

Refilling method: Remove the oil filler plug, refill the engine oil slowly with a funnel until the oil level in the engine oil dipstick reaches the upper-middle limit. Then insert the oil filter plug and screw it up.

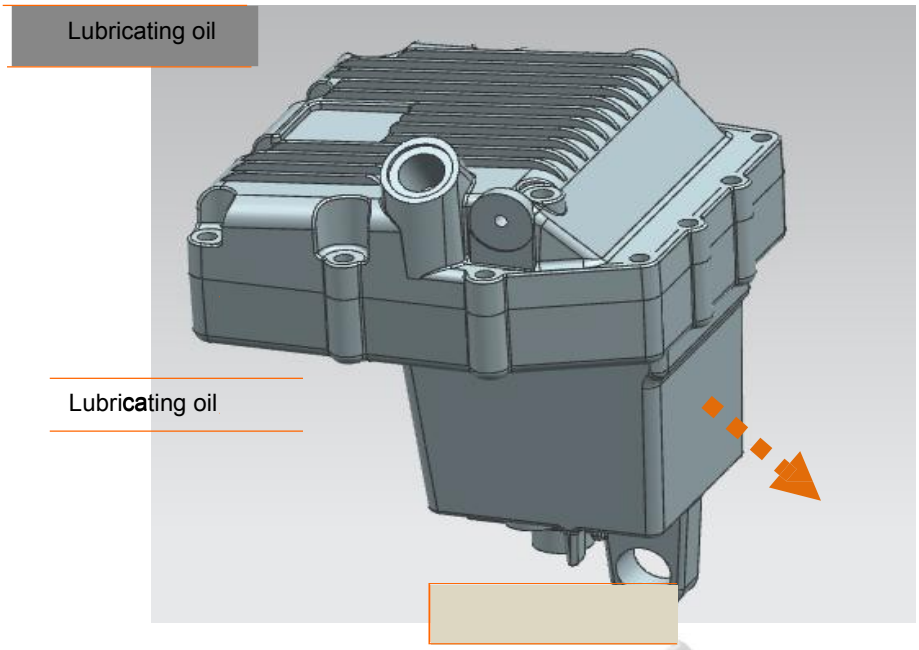

Replacement of lubricating oil

While replacing lubricating oil, it shall be carried out before the engine has cooled down. This will ensure quick and complete discharge of the engine oil in basket the crankcase.

When replacing, unscrew the oil drain plug and discharge the waste engine oil, and then clean the oil drain plug, engine oil strainer, engine oil filter, etc. Finally, insert the oil drain plug. Unscrew the oil filter plug and slowly refill 1.8L new engine oil of the specified trademark into the crankcase, then insert the oil filter plug.

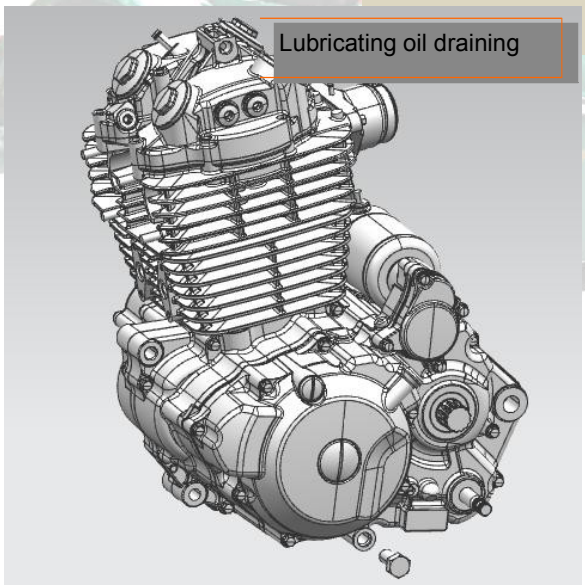

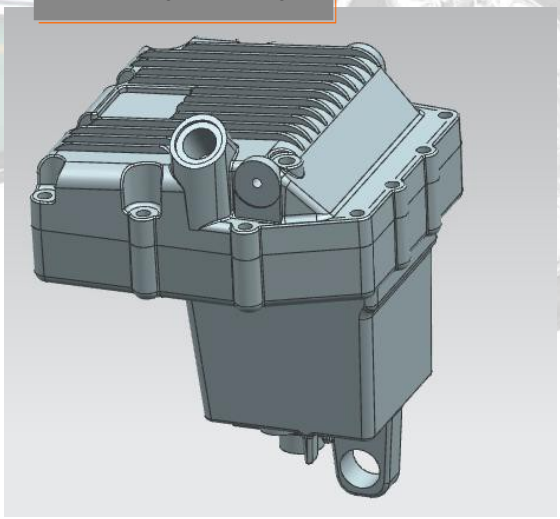

Waste engine oil flow into the oil collector

CAUTION

Application of engine oil of poor quality will have an impact on the functional performance and life span of the motorcycle engine.

Cleaning of Lubricating Oil Strainer

It shall be carried out while replacing lubricating oil.

While cleaning, you should unscrew the oil drain plug to drain the waste engine oil, and flush the strainer with cleaning agent; place the motorcycle basket down to facilitate cleaning as required. Then insert the oil drain plug, and proceed with the remaining steps according to the method of “Replacement of Lubricating Oil".

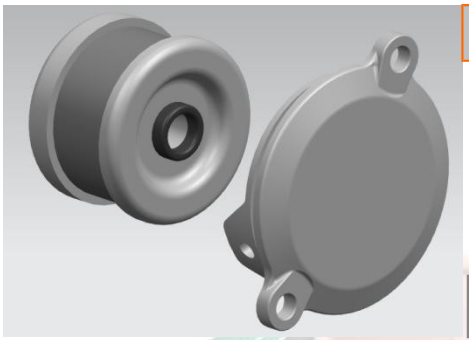

Cleaning and Replacement of Lubricating Oil Filter

Remove the engine oil filter cover to detach the engine oil filter element, clean the filter cover and filter element with cleaning agent, and then mount the clean engine oil element. Replace with a new one as required.

Check for damage of the engine oil filter cover and its O-shaped sealing ring; replace with a new one as required.

Mount the engine oil filter cover and screw up the bolt to the specified torque.

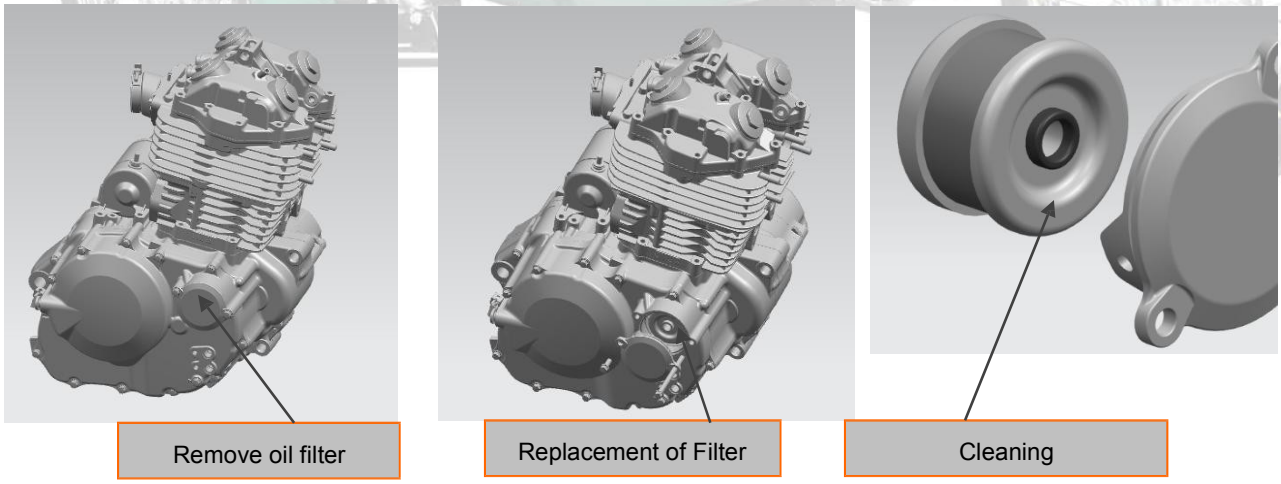

Notice

Before the crankcase is refilled with fresh engine oil, the engine oil filter must be cleaned.

Oil Pump

In case of failure, the oil pump needs to be removed for repair or replacement.

This section includes the following contents:

Steps and illustration for oil pump removal;

Steps and illustration for oil pump installation;

Disassembly and assembly of oil pump, etc.

Steps for oil pump removal:

1. Remove the oil drain plug to drain the engine oil inbasket the crankcase.

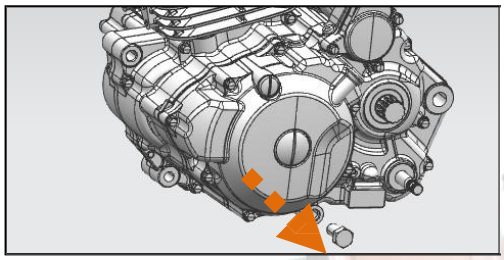

2. Loosen the right crankcase cover connecting bolts to detach the right crankcase cover components.

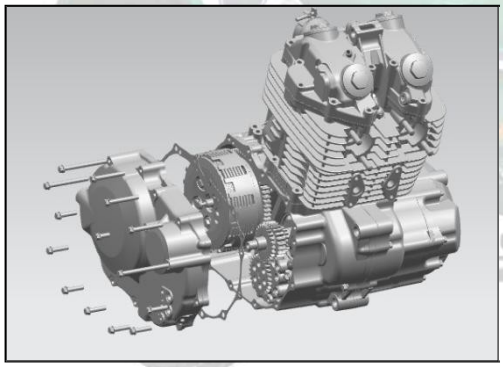

3. Use the clutch push rod extractor S TOOL to remove the clutch push rod assembly; use the fixing tool S TOOL to prevent the clutch and the primary driving gear from rotating; loosen the nut to remove the clutch component,

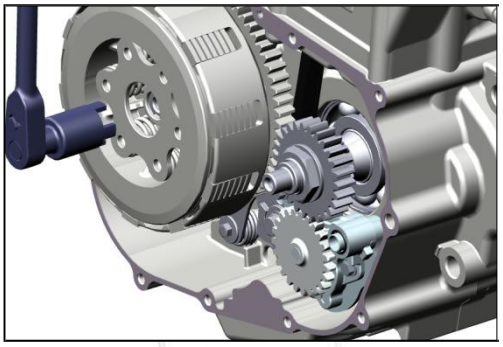

4. Remove the oil pump。

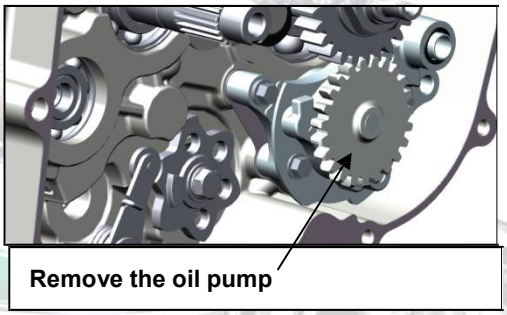

Steps for oil pump installation:

The installation procedures are the removal procedures in reverse order. Pay attention to the following points during the installation:

1、 The spare parts shall be clean and intact；

2、 Install clutch assembly, and the retaining nut M18 shall be coated with thread retaining adhesive LOCTITE243; tightening torque: 114N.m -126N.m；

3、Install clutch push rod assembly；

4、 After the right crankcase cover is mounted in place, the angle and position of the clutch operating lever may possibly change; readjustment shall be carried out to accommodate the adjustment of clutch control line；

5、 The seal washer at the bolt under the oil pump, shall be replaced with new ones.；

6、Remember to refill engine oil after all these are completed.。

CAUTION

The clutch retaining nut must be screwed up to the specified tightening torque,must be applied to prevent the nut from getting loose.

Disassembly and assembly of oil pump

Disassemble and assemble oil pump according to the following diagram.

While assembling, the rotor shall be coated with engine oil.

While assembling, check the clearances between the inner and outer rotors of the oil pump; replace it if it exceeds the wearing limit.

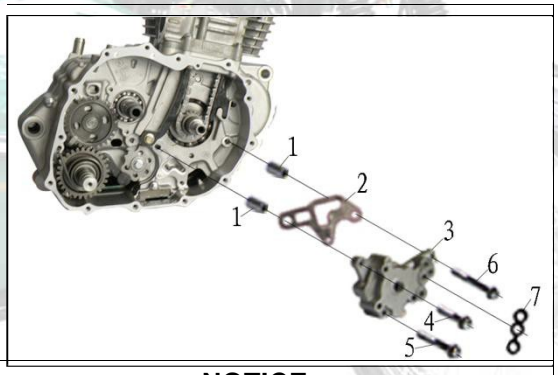

No.	Procedures	Quantity	NOTICE
	Removing order		**Installation is in the reverse order of removal**
1	Oil pump location pin	2	
2	Oil pump sealing paper gasket	1	Replace it with a new one while assembling
3	Oil pump assembly	1	Coat it with engine oil; replace it when exceeding the wearing limit
4	Flange bolts M6*32	1	
5	Flange bolts M6*50	1	
6	Flange bolts M6*40	1	
7	Oil pump rubber ring	3	

3. Inspection and adjustment

Maintenance notice	Running system
Check-up of spark plug	Clutch control line
Machine oil checking	Driving chain
Oil output tank	Battery Checking
Timing phase	Replacement of Fuse
Cylinder pressure	Brake lamp adjustment
Timing chain tension	Headlamp dimming
Valve clearance	ABS (Anti-locked Braking System)
Air filter Idle	Steering stem bearing
speed Throttle	Suspension system
control Brake	Bolts, nuts and fasteners
system	

Maintenance notice

The parts that are washed should proceed thru relevant examination work. The purpose is to confirm that the part whether it needs repair or replace the examination method is divided into three methods include direct examination, testing examination and detecting examination

Direct examination method

This method does not need instrument and other tools, it checks and determines the technologic state of part just according to the sense organs of human being. The way is simple and easy to use. It is used wide in motorcycle maintenance.

Testing examination method

This way is a way that test the size of part and change of geometric form with gauge and instrument, and make contrast to the allowed limit with the data to confirm the technologic state of part. The accuracy of this way is high, but before test should check the precision of gauge and instrument carefully and choose the testing position reasonably.

Detecting examination method

This way can test the invisible flaws of part. In motorcycle maintenance, generally adopt the best easy way--dipping oil to beat by hammer, that means putting the parts into coal oil or diesel oil to soak several minutes then take out and wipe the surface, spread talcum powder on the surface of parts uniformly, beat its nonworking sue face lightly by small hammer. owing to beating will cause versatility of part, if part has crack, then the oil sludge that dipped into crack originally will splash due to beating and versatility, then the talcum powder on surface will be dyed yellow, so one yellow line will be revealed at the crack point.

Explanation:

Unless expressly stated or indicated in the maintenance period table, check and adjust all parts of the XY400-C motorcycle according to the contents hereof before using it.

Technical specifications

- Throttle bar free stroke： 2-6mm
- Recommended spark plug： DPR8Z
- Spark plug gap： 0.6-0.7mm
- Valve clearance (cold) IN）0.07-0.10mm
- EX）0.08-0.12mm
- Idle speed： 1500±50（rpm）
- Cylinder pressure： ≥0.8MPa(300rpm)
- Driving chain tension： 15～25mm
- Rear brake pedal free stroke 20～30mm
- Front brake operating handle free stroke 10～20mm
- Clutch operating handle free stroke 10～20m

1. Check-up of spark plug

①Remove the spark plug cap. Remove the spark plug with a socket wrench. Visually check whether there is any damage with the spark plug insulator and ablation with the electrodes. If yes, replace them.

②Check the spark plug electrode gap with a plug gauge. Spark plug electrode gap 0.6 -0.7mm. Carefully adjust the electrode gap. Then clear away the accumulated carbon and contaminants with a spark plug cleaner or string wire. Check that the spark plug sealing gasket is in good condition.

③To mount the spark plug, manually screw up the spark plug first, and then tighten it with a socket wrench. Put on the spark plug cap.

The spark plug of the designated type should be used.

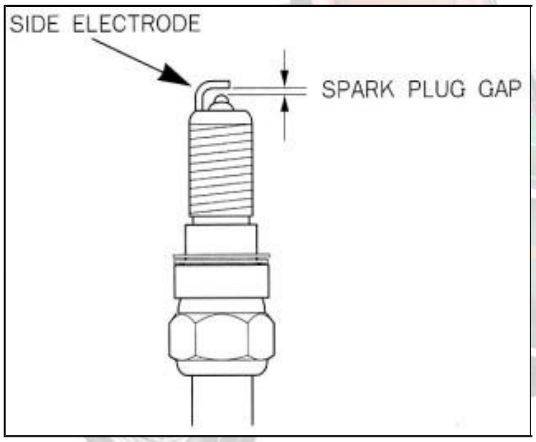

2. Machine oil checking

For some maintenance operations, one or both the basket panels need to be removed.

To remove the left- and right-hand basket panels, operate as follows:

- Detach the panel (1) from the bottom attachment by pulling it outwards.

- Lift out the panel (1) by unhooking it from the top hooks.

For refitting, operate in reverse order from removal.

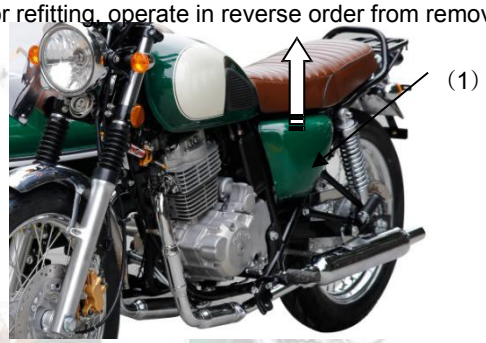

Engine-transmission oil level

Note*: Check the oil level when the engine has just been turned off and is still hot.

- Position the motorcycle on a flat surface in vertical position.

- Remove the RH basket panel as described in the relative paragraph.

- Unscrew the dipstick and remove it; clean it with a cloth and reinsert it in the filling hole without screwing it back in, then remove it again and check that the oil level is between the “MIN” and “MAX” notches.

- If you need to top up, pour in oil through the hole until reaching the correct level.

- Reinsert the dipstick and screw it back into place.

Caution

The insufficiency or poor quality of the engine oil will lead to the premature wear-out of the engine.

Replacement of lubricating oil

While replacing lubricating oil, it shall be carried out before the engine has cooled down. This will ensure quick and complete discharge of the engine oil inbasket the crankcase.

When replacing, unscrew the oil drain plug and discharge the waste engine oil, and then clean the oil drain plug, engine oil strainer, engine oil filter, etc. Finally, insert the oil drain plug. Unscrew the oil filter plug and slowly refill 1.8L new engine oil of the specified trademark into the crankcase, then insert the oil filter plug.

Caution

Application of engine oil of poor quality will have an impact on the functional performance and life span of the motorcycle engine.

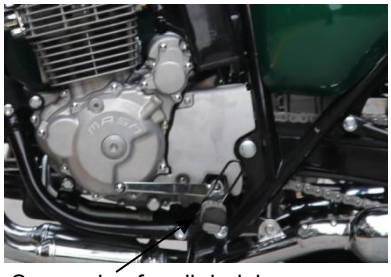

Screw plug for oil draining

Cleaning of Lubricating Oil Strainer

It shall be carried out while replacing lubricating oil.

While cleaning, you should unscrew the oil drain plug to drain the waste engine oil, and flush the strainer with cleaning agent; place the motorcycle basket down to facilitate cleaning as required. Then insert the oil drain plug, and proceed with the remaining steps according to the method of “Replacement of lubricating oil".

Cleaning and Replacement of Lubricating Oil Filter

Remove the engine oil filter cover to detach the engine oil filter element, clean the filter cover and filter element with cleaning agent, and then mount the clean engine oil element. Replace with a new one as required.

Check for damage of the engine oil filter cover and its O-shaped sealing ring; replace with a new one as required.

Mount the engine oil filter cover and screw up the bolt to the specified torque.

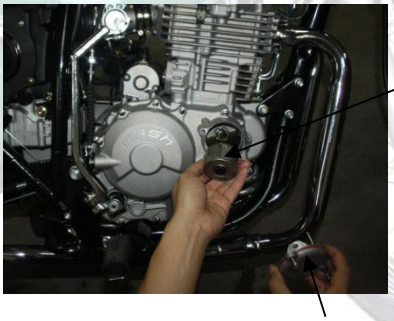

Remove oil filter cover

Notice

Before the crankcase is refilled with fresh engine oil, the engine oil filter must be cleaned.

3. Oil output tank

1) Oil pot total volume 2.2L, intermediate position oil dipstick oil pot on the line for 1.8L。

2) Pot plus external pipe and radiator total volume loading was 2.3 ± 0.05L。Filling volume for 2.2L。Oil radiator shall be installed in the face of location of the wind。

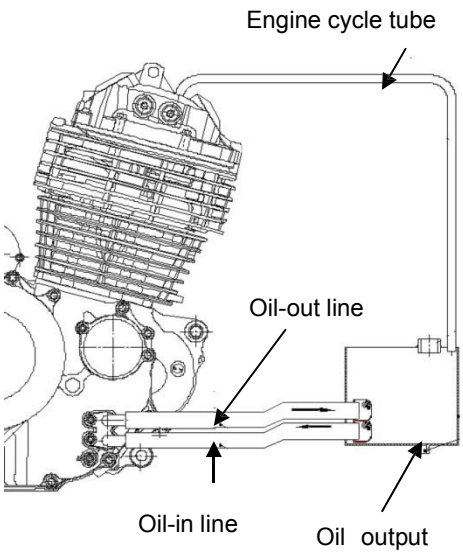

4. Timing phase

It shall be carried out when the vehicle is new or there is any question about the timing phase.

Remove the cylinder head cover

Turn the crankshaft pulley Counterclockwise to align the scale line "I" with the indication mark " ▼" on the front-left cover. When the piston is at the upper dead point, the scale line on the camshaft is at the same level with the.

⚠ Notice

At this point, the piston must be at the upper dead point of the compression stroke other than that of the exhaust stroke.

Adjustment of Ignition Time

That the ignition lead angle is not correct will cause a series of problem that engine is difficult to start, power decrease, oil consumption increase, engine overheats, burning is not complete, emission exceed standard, use life reduce and so on. So should adjust the ignition lead angle at first

Need not adjust the ignition timing if engine without contact ignition. If the ignition system is abnormal, should check electronic ignition, high-voltage coil, charging on the generator and trigger coil etc.

After properly timing, pull off the tensioner locking key and coat the mixture of engine oil and molybdenum disulfide on the tensioner to make it tensioned; mount the sprocket retaining plate and retaining bolt.

While aligning

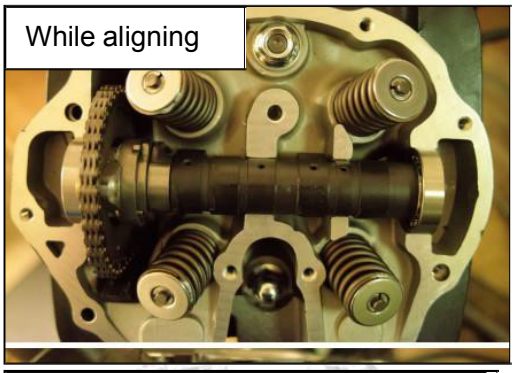

The boss is in the center of the hole

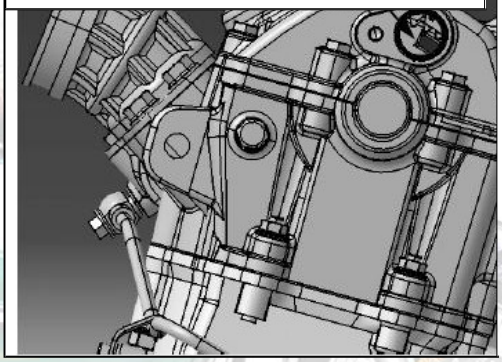

Cylinder pressure

When the engine fails to start or is difficult to start, or when questioning the cylinder pressure is abnormal after other possible faults have been excluded, check the cylinder pressure.

Cylinder pressure: ≥0.8MPa/300r/min.

While testing, remove the spark plug and mount a pressure gauge at the position where the spark plug is mounted; fully open the throttle bar and electronically start the engine, and then check all connecting points of the pressure gauge for gas leak. Zero the pressure gauge and restart the engine until the pressure gauge reading stops rising. The maximum reading of the pressure gauge can usually be reached after 1 or 2 startups.

Such maximum reading shall be the cylinder pressure. Upon completion of testing, mount the spark plug to its original position.

The main reasons for insufficient cylinder pressure include:

- **Incorrect valve clearance adjusted**
- **Valve leakage**
- **Cylinder head sealing gasket ablated**
- **Piston ring or cylinder worn**
- **Piston ring worn**

The main reasons for excessive pressure include:

Presence of accumulated carbon inbasket the combustion chamber or on the piston top

Timing chain tension

Start the engine to run at idle speed.

Carefully listen to the sound given off by the running engine: if the timing chain gives off ringing sound "Dah-Dah", it indicates insufficient tension of the chain tensioner, replace it with a new one.

To replace the chain tensioner:

Unscrew the 2-M6×16 socket cap screw to remove the sealing washer and detach the old chain tensioner. Take care not let the sealing washer and so on fall into the case.

Insert the tensioner 4 locking key into the tail end of the new chain tensioner, turn and retract the front end of the tensioner and lock it, then replace with a new sealing washer, mount the new chain tensioner and fasten.

Pull off the tensioner locking key to tension the timing chain. Replace with a new sealing washer and screw up the bolts on the tail end of the chain tensioner.

⚠**Notice**

When the timing chain is loosened, never turn the crankshaft for fear of interlocking tooth while timing.

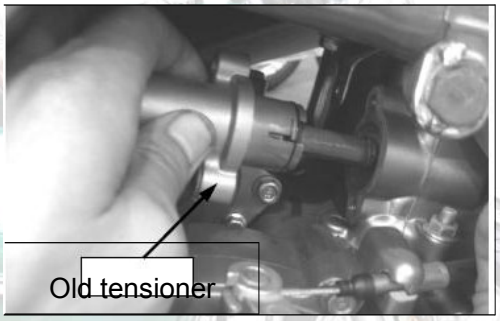

5. Valve clearance

⚠ Notice:

While adjusting the valve clearance, the engine shall be cold.

(Temperature ＜35℃)

Noise will stem from too big valve clearance. However if there is too small gap or even no gap at all, closing of the valve will be hindered, which will cause many problems such as engine stall, power loss, etc. Therefore, the valve clearance must be checked periodically.

The valve clearance should be inspected and adjusted on a cold engine by the following procedures:

Remove the caps of the central hole and the ignition timing observation hole on the left crankcase cover.

Remove the caps of the two air valves on the cylinder head.

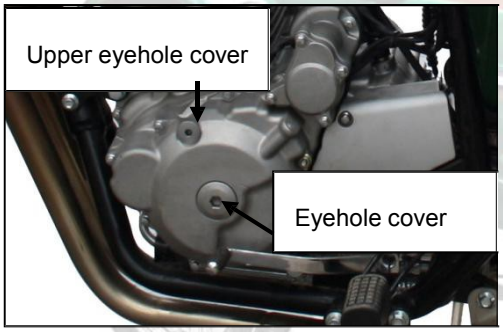

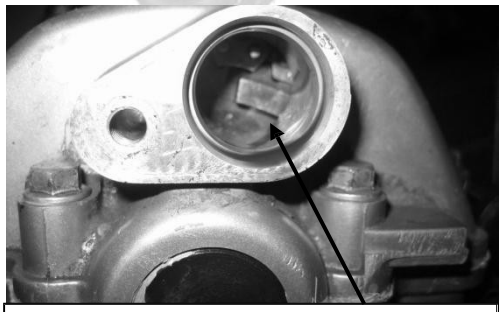

Confirm the upper dead point

Turn the nut of the flywheel clockwise until the engraved “T” mark on the flywheel aligns with the engraved line on the top of the crankcase cover, and both intake and exhaust rock arms do not move but stop at their loosest position, which shows that the piston is in its top dead center position of the compressing stroke. If the “T” mark is near its right position but rock arms will move apparently when flywheel rotate a small angle, the flywheel is not in the compressing stroke but exhaust/intake stroke. In this case, continuously turn the flywheel clockwise for 360 degrees to the top dead center position of the compressing stroke, where the valve clearance can be adjusted. Afterwards, check the valve clearance by inserting a clearance gage into the gap between adjusting screw and the end of the valve.

The specified valve clearance is : 0.07-0.10mm for intake valve and 0.08-0.12mm for exhaust valve respectively.

If clearance adjustment is needed, loosen the locking nut on the rock arm, turn the adjusting nut till a slight resistance is felt on the inserted right clearance gage.

At the end of the adjustment, tighten the “Locking out ”to prevent loosening and another check to make sure that the valve clearance is OK before all those dismounted caps are refitted on.

While adjusting, unscrew the retaining nut and then turn the adjusting screw until you feel that the clearance gauge is slightly pulled. Then secure the adjusting screw using the valve adjusting tool

, and then screw the retaining screw. And finally, check the valve clearance.

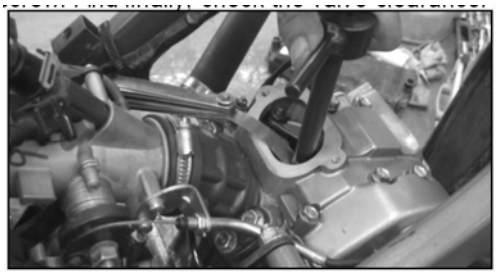

6. Air filter

Cleaning and replacement of air filter

- Remove the left basket covers Handle it carefully to avoid scraping.
- Remove 4 screws（1）, remove Air filter cover（2）

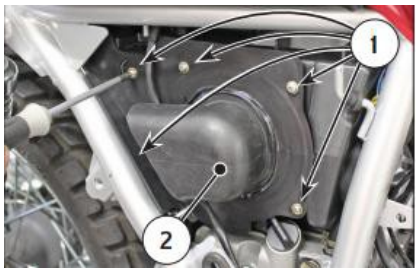

Description

1) ***Remove the filter element and check whether it is in normal condition. This is a paper filter element, of which the surface can be cleaned with compressed air; if the filter element is too dirty, broken or damaged, replace it;***
2) ***While driving in a more dusty area, the time period for cleaning and replacing air filter element shall be shorter.***
3) ***Keeping the cleanness of the air filter may improve the engine's operating efficiency and prolong its life span.***

7. Idle speed

Notice

Check and adjust the idle speed after all other items of the engine have been adjusted to the specified ranges.

For this model, the idle speed is controlled by an ECU. Since the intake flow at idle speed has been properly adjusted upon delivery, do not adjust the idle speed adjusting screw as desired. In case the idle speed is unsteady, zero or too high, find out the possible causes with the troubleshooting method for the EMS system and eliminate the trouble.

Under the monitoring of the maintaining and diagnostic instrument, check whether the ignition advance angle is between 0°-15°. If the ignition advance angle is more than 15°, it indicates the throttle valve's intake flow at idle speed is insufficient, and at this point, the idle speed is unstable or null; if the ignition advance angle is less than 0°, it indicates the intake flow at idle speed is too big, and at this point, the idle speed is often as high as more than 1800 r/min. Only under the above two cases, unscrew the retaining nut and adjust the idle speed adjusting screw to let the intake flow reach the specified flow.

Idle speed 1500 r/min ± 50 r/min.

After adjusting toe-in, remember to screw up the retaining nut.

Maintaining & diagnostic instrument

8. Throttle control

First, check whether the throttle control line is deformed, twisted or damaged.

Then, measure the throttle bar free stroke. Turn the bar to lean it against one basket of the free stroke, and draw a straight line between the bar and the balance weight with a mark pen, and then turn the bar to lean it against the other basket of the free stroke; measure the distance the straight line staggers, i.e. the throttle bar free stroke.

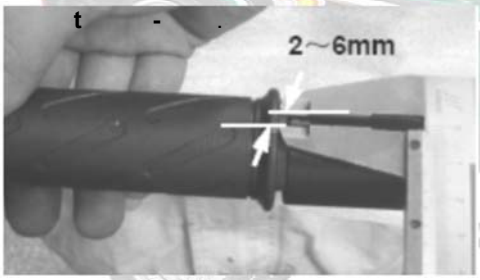

If the free stroke is insufficient or too big, make adjustment.

Adjusting methods:

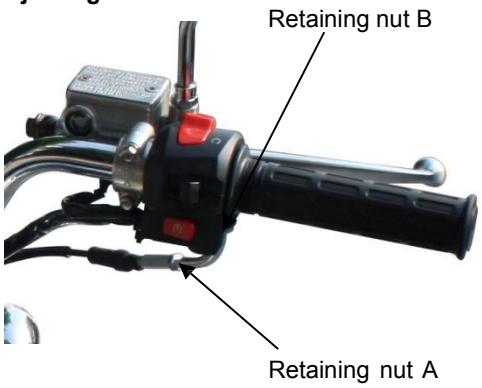

Fine adjustment:

Pull open the rubber lagging, unscrew the retaining nut A, and turn the adjusting solenoid to adjust to a satisfied free stroke. And then screw up the retaining nut A and mount the protective rubber lagging.

Coarse adjustment:

If the fine adjustment is not satisfying, separate the throttle control line with throttle valve body and unscrew the retaining nut B to make adjust the free stroke in a larger range. Screw up the retaining but B after the adjustment.

Check whether the throttle can turn smoothly from full open to full close at any position. If there is clogging, adjust or replace it.

Use not full throttle to the free stroke motorcycle is a dangerous operation, rotating the handle, not full throttle to the free stroke can make the engine speed increases suddenly.

9. Brake system

The front brake and the rear brake and the basket brake is disk type, due to the abrasion of the brake shoes, the brake fluid will be getting less as time goes by.

The performance can't be adjusted, but the brake fluid level and brake shoe abrasion are the two most important factors, that need to be checked on time.

The brake system should be checked frequently, to ensure there is no leaking.

Good and bad of brake function concern the move ment security, that adjust the brake correctly is very important. **Check the front brake handle free stroke.**

The brake handle free stroke 10-20mm

Check the rear brake pedal free stroke.

Rear brake pedal free stroke 18-25mm.

If it is necessary to adjust, turn the adjusting nut to the position of the specified free stroke.

Brake fluid level inspection:

Check the brake fluid level in the front brake cylinder: if the level is too low but not emptied, directly refill brake fluid (DOT 3 brake fluid).

If the brake fluid in both the front and the rear cylinders is drained, bleed air from the deflating valve of the brake caliper with a vacuum pump, and then refill brake fluid into the cylinder.

This model has total of 3 brake calipers, wherein, the front brake caliper (controlled by front brake handle), and the rear brake caliper interlocks with the basket brake rear caliper (controlled by rear brake pedal), therefore, the vacuuming process shall be carried out simultaneously for the rear brake caliper and the basket brake rear caliper

The fluid level in the pump reservoir may never drop below the minimum notch (LOWER) (1) visible on the port (2) on the rear of the pump body

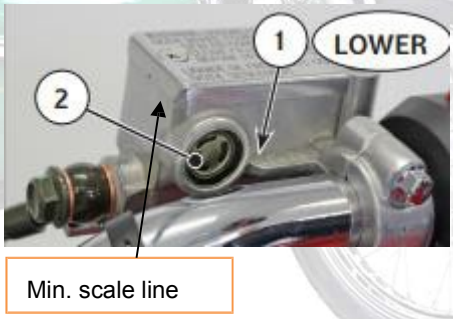

If the brake lever feels mushy when pulled, there may be air in the brake lines or the brake may be defective. Since it is dangerous to operate the motorcycle under such

conditions, have the brake system immediately checked by the SHINERAY Dealer.

⚠ CAUTION

1) ***Do not spill brake fluid onto any painted surface or light lens.***
2) ***Do not mix two brands of fluid.***
3) ***Completely change the brake fluid in the brake system if you wish to switch to another fluid brand.***
4) ***Brake fluid may cause irritation.***
5) ***Avoid contact with skin or eyes. In case of contact, flush thoroughly with water and call a doctor if your eyes were exposed.***

Brake fluid vacuum filling method:

- This method is only applicable to refilling brake fluid for new vehicles or when the brake fluid in the cylinder is drained.
- Bleed air from the deflating valve of the vacuum pump's caliper (proceeding simultaneously for the rear brake caliper and basket brake caliper).

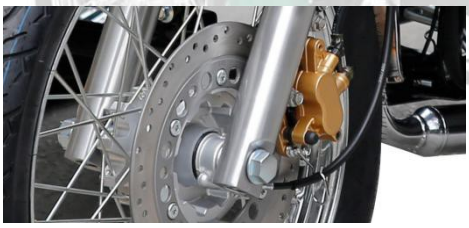

- Open the cover of brake cylinder cover and refill brake fluid.

- Actuate the brake handle or pedal, exhaust the air in the dead corner of the brake caliper.

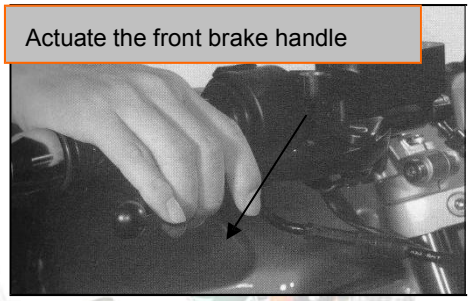

- When the vacuum pump has fully exhausted the air inbasket the brake caliper, after the brake fluid is pumped out, firmly nip the handle or completely push down quickly screw the deflating valve bolt, with the torque being 7-9 N.m.
- Mount the brake cylinder cover with the sealing gasket flattened, and replace with new sealing gasket as required.
- After refilling, check the oil cup, hydraulic brake hose and all connecting pieces for leakage.

Notice

The brake fluid shall be DOT 3 non-petroleum base brake fluid.

The brake fluid can't be mixed with other Impurities; otherwise the braking performance shall be reduced due to chemical change.

Caution

The brake fluid is strongly corrosive, never splash it onto the surfaces of sprays painted or plastic pieces; in case it splashes into the eyes or on the skin, immediately flush with large amounts of fresh water and see a doctor.

Brake piece checking

Check the state of wear of the front brake pads① and the rear brake pads②

- The pads have a groove that indicates wear;

when the groove has almost disappeared, the pairof brake pads have to be replaced

Caution

Contact an SHINERAY dealer to have the brake pads replaced.

After the brake pads have been replaced, ride carefully and brake gradually in order to allow the brake pads to properly run in/couple to the relative discs.

Substitution of the brake pads

Press the brake caliper towards the brake disc, and put the brake piston back into its basic position. Remove the clips and pull out the bolt. Clean up the brake caliper and the support with compressed air. Check whether or not the sleeves of guiding bolts in damaged or not, and grease the bolts if necessary.

When installing the brake pads, be sure to check whether or not the sliding metallic sheet is correctly set up on the caliper support and in the spring。

10. Running system

Tire specifications and tire pressure

Check the tire pressure with a tire pressure gauge to see whether the pressure conforms to the recommended value.

Tire specifications and recommended tire pressure:

If the tire pressure can't reach the specified requirements, check the tire for cuts, embedded iron nail or other sharp articles.

⚠ Caution

The tire pressure measured when the tire is cooled down shall be the correct tire pressure.

Spoke

Check the wheel for loosened or broken spokes.

Screw the loosened spokes to the specified torque with a spoke nut fastening tool S TOOL.The spoke nut torque: 2.45-4.0N.m.

If any spoke is broken or cracked, replace it as soon as possible

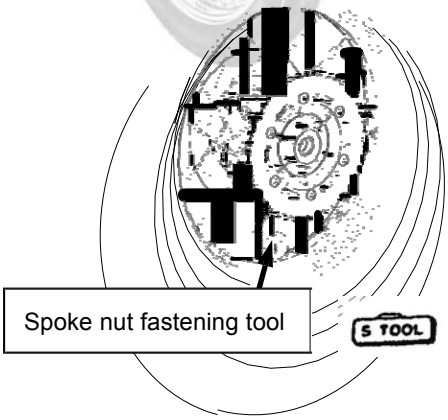

11. Clutch control line

Clutch is the key part of transmitting power in motorcycle transmission system, should adjust it according to the following overhauling content. The content is the free stroke of clutch control handle(general is 10-20mm), some venial need adjust the adjusting screw of declutch mechanism.

Check the clutch operating handle free stroke. Clutch operating handle free stroke: 10-20mm.

Adjusting methods:

Fine adjustment: Pull open the rubber lagging, unscrew the retaining nut, and turn the adjusting nut to adjust to a satisfied free stroke. And then screw up the retaining nut and mount the protective rubber lagging.

If a satisfactory free stroke can't be achieved by fine adjustment, remove the clutch control line on the handle end to adjust the engine end.

Adjusting methods:

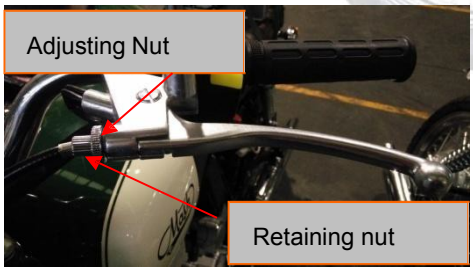

Coarse adjustment:

Remove the clutch control line on the handle end, and then remove the clutch operating arm on the engine end; turn the clutch operating arm by a proper angle and remount it, and then mount the clutch control line, finally adjust it to a satisfied

free stroke according to the fine adjustment.

protective rubber lagging

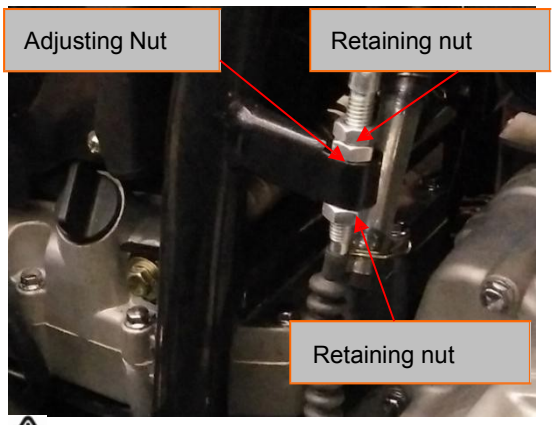

Notice:

Always ensure the clutch operating handle has the proper free stroke! Being too loose will cause a failure of the clutch detachment, while being too tight will cause poor clutch engagement thus damaging the clutch

12. Driving chain

Driving chain tension inspection

Park the motorcycle on level ground with main stand, and shift the transmission to the neutral position. Check the driving chain tension. Press the chain with a finger up and down to check the amount of movement of the lower chain.

Driving chain tension: 10-20mm.

If the chain is too loose or too tight, make adjustment.

Adjusting methods:

Unscrew the rear wheel spindle nut and turn the adjusting bolt on the chain adjuster until the specified tension is achieved, and then fasten the rear wheel spindle nut, and check the flexibility for free rotation of the rear wheel and the consistency of the front and rear wheels.

Adjusting methods:

Unscrew the rear wheel spindle nut and turn the adjusting bolt on the chain adjuster until the specified tension is achieved, and then fasten the rear wheel spindle nut, and check the flexibility for free rotation of the rear wheel and the consistency of the front and rear wheels.

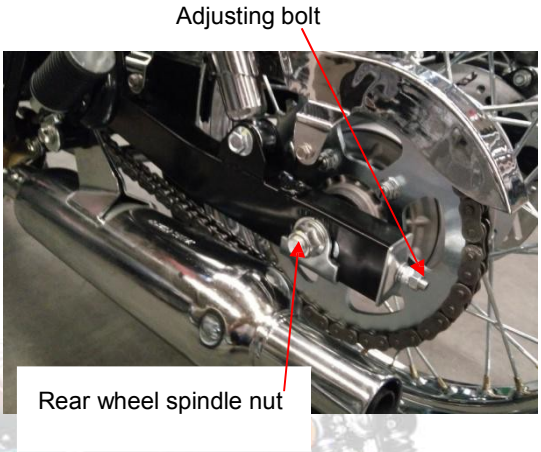

Caution

The scale lines of the chain adjuster on both baskets must be consistent with each other.

Warning

The rear wheel spindle nut must be firmly screwed up to the tightening torque of 40-50N.m.

Inspect the abrasion of major / minor sprocket. In case of serious tooth abrasion, teeth missing or broken teeth, replace it.

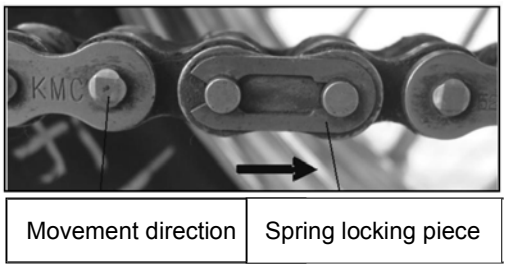

Notice:

The scale lines of the chain adjuster on both baskets must be consistent with each other.

Cleaning and coating oil

Notice

This model uses the oil seal chain, so the selected washing oil shall be in corrosive to the oil seal; while assembling the chain, the locking piece coupling spindle shall be coated with appropriate amount of chain-specific lubricating oil.

Warning:

While mounting the spring locking pieces, its opening end shall be in the opposite direction with the normal movement of the driving chain.

13. Battery Checking

The sealed battery does not require any maintenance. When electrolyte leaks, or other failure of the electrical system is detected, apply to the SHINERAY Dealer.

If the vehicle remains unused for long periods, it is recommended to disconnect the battery from the electrical system and store it in a dry place.

- After an intensive use of the battery, it is advisable to carry out a standard slow charging cycle.

- Quick charging is advised only in situations of extreme necessity since the life of lead elements is drastically reduced by such cycle.

Detach the panel from the bottom attachment by pulling it outwards.

Lift out the panel by unhooking it from the top hooks.

Clean away dust and corrosive from the surface of the battery.

Remove the negative, then the positive pole of the accumulator; unscrew and remove the loosen battery strap

.The battery is free of maintenance. There is no need to check the electrolyte level. Clean the battery terminals regularly.

The condition of charging will significantly influence the life length of the battery.

Seriously corroded conductor connectors of the battery shall be replaced.

To remove the battery

Open the battery box, firstly disconnect the negative pole, then the positive pole. Remove the battery and replace with a new one (of the same type and specification), then connect the positive pole first and the negative pole last.

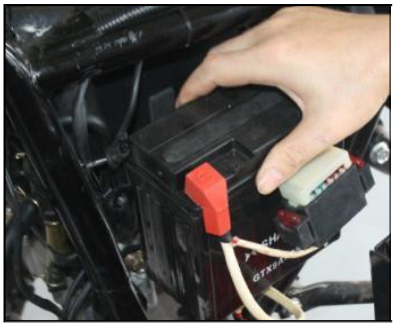

Installation of accumulator

Installation is in the reverse order of removal. While connecting the poles, connect the positive pole first.

Charging the battery

The battery is losing power every day, even if it is not used. Please disconnect the battery cord, and strictly follow the instruction in the operation manual while charging battery.

The charging amperage and time of charging should not exceed the required standards. Charging at high amperage will negatively influence the life of the battery.

Please regularly use special charging devices to charge the maintenance free battery. You can also apply such device to test overload voltage, the stability of the battery. In addition, this charging device will avoid overcharging of the battery.

If you find the battery is out of charge when starting the motorcycle, please charge the battery as soon as possible.

Battery will be damaged if it stands in a status of being uncharged for a long period.

⚠**Caution**

1) ***In this model, both the startup and EMS system are completely powered with accumulator. Therefore, it is quite important to ensure sufficient electric quantity of accumulator, otherwise, startup is impossible.***

2) ***Never fill in tap water, because this will shorten the accumulator's life span.***

3) ***To dismantle battery ,disconnect the negative(-)electrode before the positive(+)one, and vice versa in installation .Ensure against any contact of the positive(+)electrode with the vehicle body.***

4) ***Never have the electrolyte level come over the upper mark line when adding distilled water .Otherwise overflow and corrosion will occur.***

5) ***The electrolyte contains sulfuric acid and will cause serious hurt to skin and eyes by contact. In case of contact with it, wash it off for 5 minutes and see a doctor immediately.***

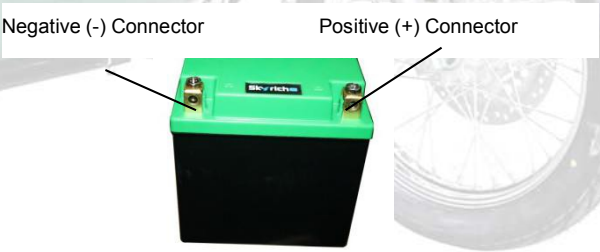

6) **Foreign matter should be prevented from entering into the battery during dismounting and installation.**

7) **The breathing pipe must be kept unblocked.**

14. Replacement of Fuse

Set the ignition switch to “OFF” position. The specified fuse tube of 15A/10A should be used for main fuse replacement, and a 10A fuse tube for FAI injection nozzle.

Open the left basket cover, remove the fuse holder on the basket of the battery and replace the fuse tube.

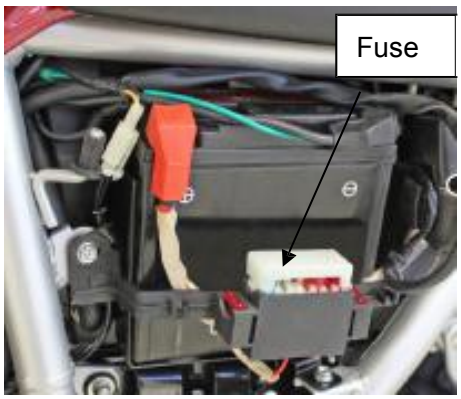

If the new fuse tube is broken again as soon as it is fitted on, it means that somewhere of the electric parts is shorted unexpectedly.

⚠ Caution

Do not use any fuse over 15A/10A

Be sure not to wash the battery when washing the vehicle.

15. Seat belt

∗ Always fasten seat belt while operating the motorcycle.

∗ Check the seat belt for any damage. Replace the damaged seat belt immediately.

∗ Do not use the seat belt if the motorcycle does not have the safety frame.

To fasten:

Connect both segments of the belt with the buckle.

To unfasten:

Press the red button on the buckle to release the seat belt.

Connect both segments of the belt with the buckle, being careful to avoid twisting of the belt, adjust the belt length, being suitable for the operator.

16. Parking lever

Turn the parking lever to the left basket tightly.

How to release it:

Pull parking lever to the right basket, it will return automatic to its position, the front brake will be relieved at the same time.

⚠ Caution

When starting the engine or parking the motorcycle, apply the parking lever to lock the front wheels to prevent the motorcycle from moving and causing the risk of hazard.

If the play of the brake handle level is incorrect, the front wheels may not be locked, which may cause the risk of a hazard.

17. Illumination signal system

Headlamp dimming

Before driving, check the brightness, direction, etc. of the headlamp.

The adjustment can be made to the headlamp in the left / right and vertical directions.

Loose the screw to disassemble the headlight.

Rotating , directly unplugging

Rotating and disassemble the bulb.

Install the new bulb in reverse order

Headlamp bulb specifications:12V55W/60W

Position lamp bulb specifications: 12V5W

Combined rear position lamp

✧ - Undo the two screws (1) and remove the lens (2).

✧ - Remove the bulb (3) by pushing and turning it anticlockwise.

✧ - Fit a new bulb in the bulb holder, pushing and turning it clockwise to lock it into place.

✧ - Refit the lens (2) and tighten the screws (1) without forcing.

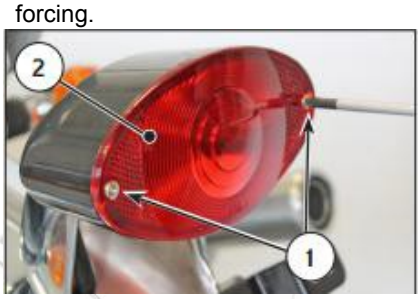

Turn signal light

✧ Loosen the screws（1）, remove the lamp lampshade（2）

✧ Lightly press bulb（3）, rotate in counter-clockwise.

✧ Install new bulb in opposite order as below.

✧ Turn lamp bulb specifications:12V10W

18. Steering stem bearing

Lift the motorcycle with a jack or other support with the front wheel being apart from the ground surface, and check whether the steering handle can rotate freely; if the steering handle cannot rotate in balance, or has axial looseness or jamming, adjust the front fork stem adjusting nut.

19. Suspension system

Front suspension

Make the front brake in braking state and press the front fork bracket for several times, and check the front suspension for normal operation.

If abnormal noise or “Crack” sound is heard, check all the fasteners and screw them up to the specified torques.

Rear shock absorber spring preload adjustment

The rear shock absorber (1) spring preload can adjusted; to make the adjustment, operate as follows:

- Using an appropriate spanner, turn the ring nut (2) positioning the adjuster (3) in correspondence to the catch (4).

- For a softer adjustment, move the adjuster (3) towards position “1” and for a harder adjustment move it towards position “5”.

Standard adjustment is in position “2”.

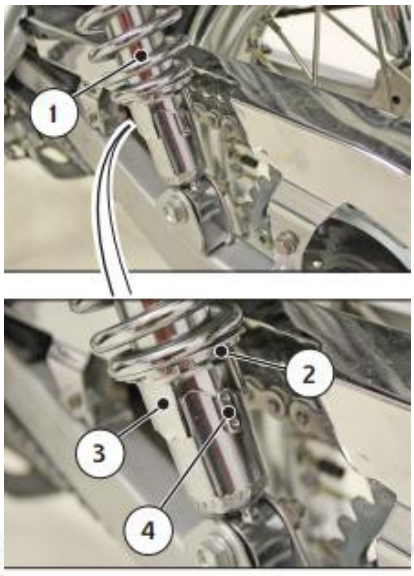

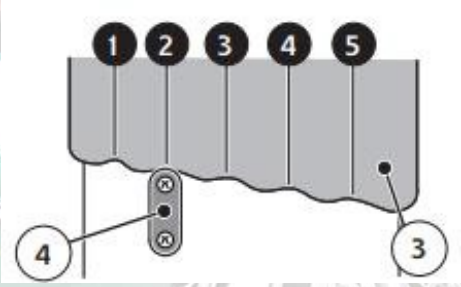

20. Bolts, nuts and fasteners

All the bolts, nuts and fasteners shall be screwed up as per the maintenance period table. And check all the cotter pins, safety gripping gears, locks, etc.

4. Fuel system

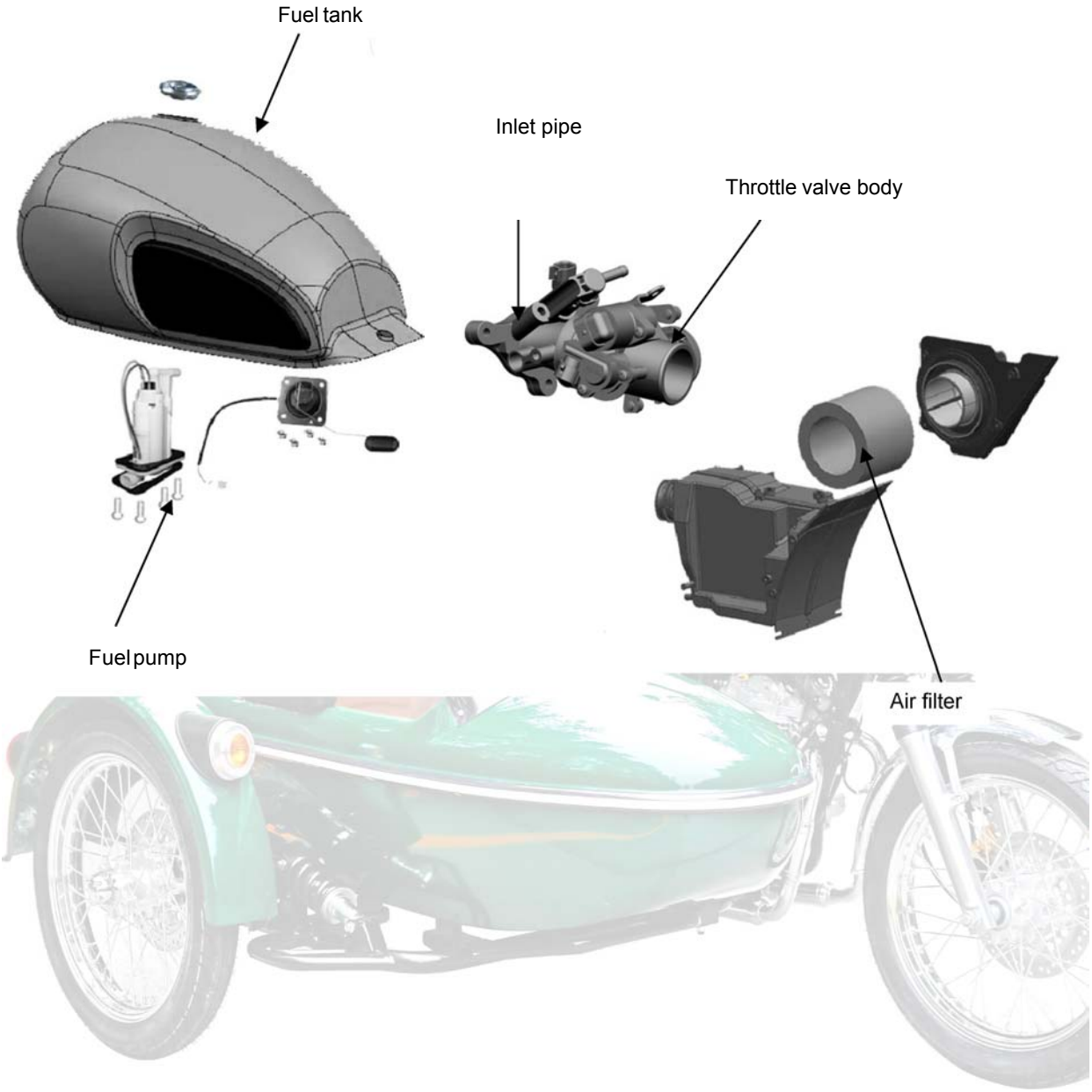

Fuel system

Maintenance notice	Disassembly and assembly of fuel tank
Troubleshooting	Removal and installation of air filter
Removal and installation of fuel tank	Removal and installation of carburetor

Maintenance notice

This section introduces the knowledge related to the fuel system.

CAUTION

- ***Pay special attention to fire prevention while dealing with gasoline!***

Take care of the mounting position of such sealing members as the O-ring while removing various parts of the fuel system. While reassembling, always use new sealing members such as an O-ring.

Technical specifications

Throat opening diameter	**Φ40mm equivalent**
Idle speed	**1500r/min ± 50 r/min**
Throttle handle free stroke	**2 ~ 6mm**

Troubleshooting

- Engine ignition is ok, but it does not start

1 No fuel or insufficient fuel in the fuel tank

2 Too much fuel enters the cylinder;

3 Air filter is clogged;

4 Spark plug fails;

5 Fuel tube does not flow well;

6 Fuel quality problem (containing moisture);

7 Fuel is stored too long;

8 Fuel pump failure;

9 Injector failure (clogged)

Removal and installation of fuel tank

Disassemble step

1. Turn off fuel tap and check it whether leak fuel.

2. Take off fuel tank lock to check it whether is damaged.

3. Remove the seat

4. Dismantle fixed bolt.

5. Loosen the tube clamp and pull off the fuel tube

6. Pull off the fuel pump relay control wire patch plug.

7. Pull off the fuel pump control wire patch plug.

8. Pull off the fuel level sensors control wire patch plug.

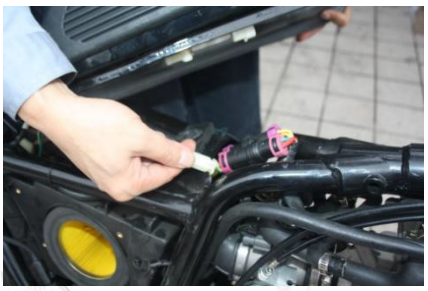

9. Remove the fuel tank.

To avoid fuel line contamination, clog the joint with fireproof fabric after pulling off the fuel tube.

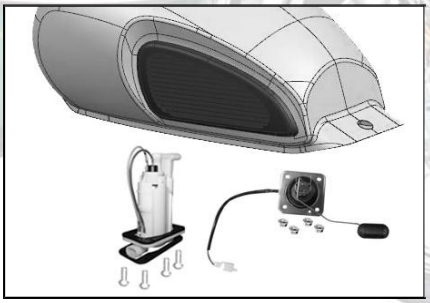

Installation steps

The installation procedures are the removal procedures in reverse order.

While installing, note that the wiring of the fuel pump control wire shall be in strict accordance with the wiring diagram. Avoid fuel line contamination.

Removal and installation of air filter

Take out the air filter and check if it is contaminated.

Disassemble:

Open and remove the right basket cover,

Remove 4 screws(1), remove Air filter cover(2)

Remove the filter element(3) and check whether it is in normal condition. This is a paper filter element, of which the surface can be cleaned with compressed air; if the filter element is too dirty, broken or damaged, replace it;

While driving in a more dusty area, the time period for cleaning and replacing air filter element shall be shorter.

Keeping the cleanness of the air filter may improve the engine's operating efficiency and prolong its life span.

After cleaning or replacing filter element, reassemble the complete vehicle in the reverse order.

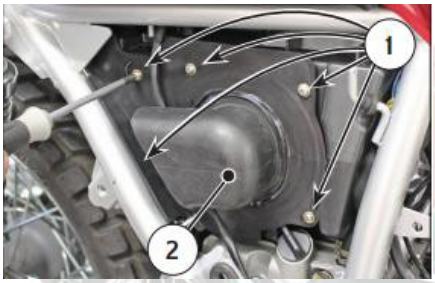

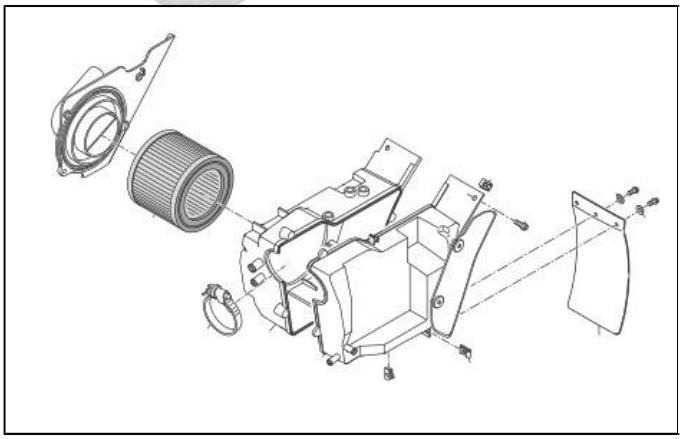

Remove and installation of throttle body

Disassemble step：

- Removal of rear wheel

- Removal of seat

- Loosen inlet pipe clip;
- Remove throttle body (including the fuel injector).

- Removal of fuel tank

Installation steps：

The installation procedures are the removal procedures in reverse order. While installing, the locating slot must be aligned with the locating lobe of throttle body

Warning:

Do not further disassemble the removed throttle body; in case several sensors on it need to be changed, proceed under the instruction of an EMS system technician.

Fuel filling

- turn the engine off.

- move laterally, the lid (1) of the greenhouse culture.

- insert the key (2) and move it 1 / 4 turn in the direction of the arrow "A" to unlock the cap (3).

- turn the cap (3) counter clockwise and remove it from the tank.

introduction of fuel through the nozzle (4).。

- get back the cap (3) moving inversely to the actual removal, then remove the key (2) and move the lid (1) of the protection lock

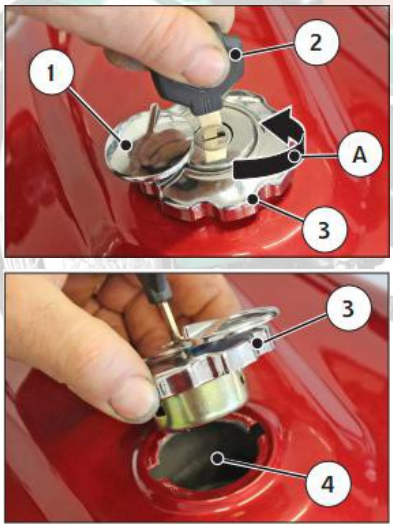

Maintenance of Air Cleaner

Component description	Damage form	Trouble symptom of motorcycle	Repair method
Air cleaner	Too much dust deposit on the filtering element.	The engine is difficult to start. Insufficient engine output；Poor performance of engine during idle run. Excessive fuel consumption. The exhaust muffler pipe fumes strongly (black).	C1ean the filtering element. c1ean
	The filtering element is fractured or chipped	Engine air suction noise is too loud	Replace the filtering element.

5. Removal and installation of engine

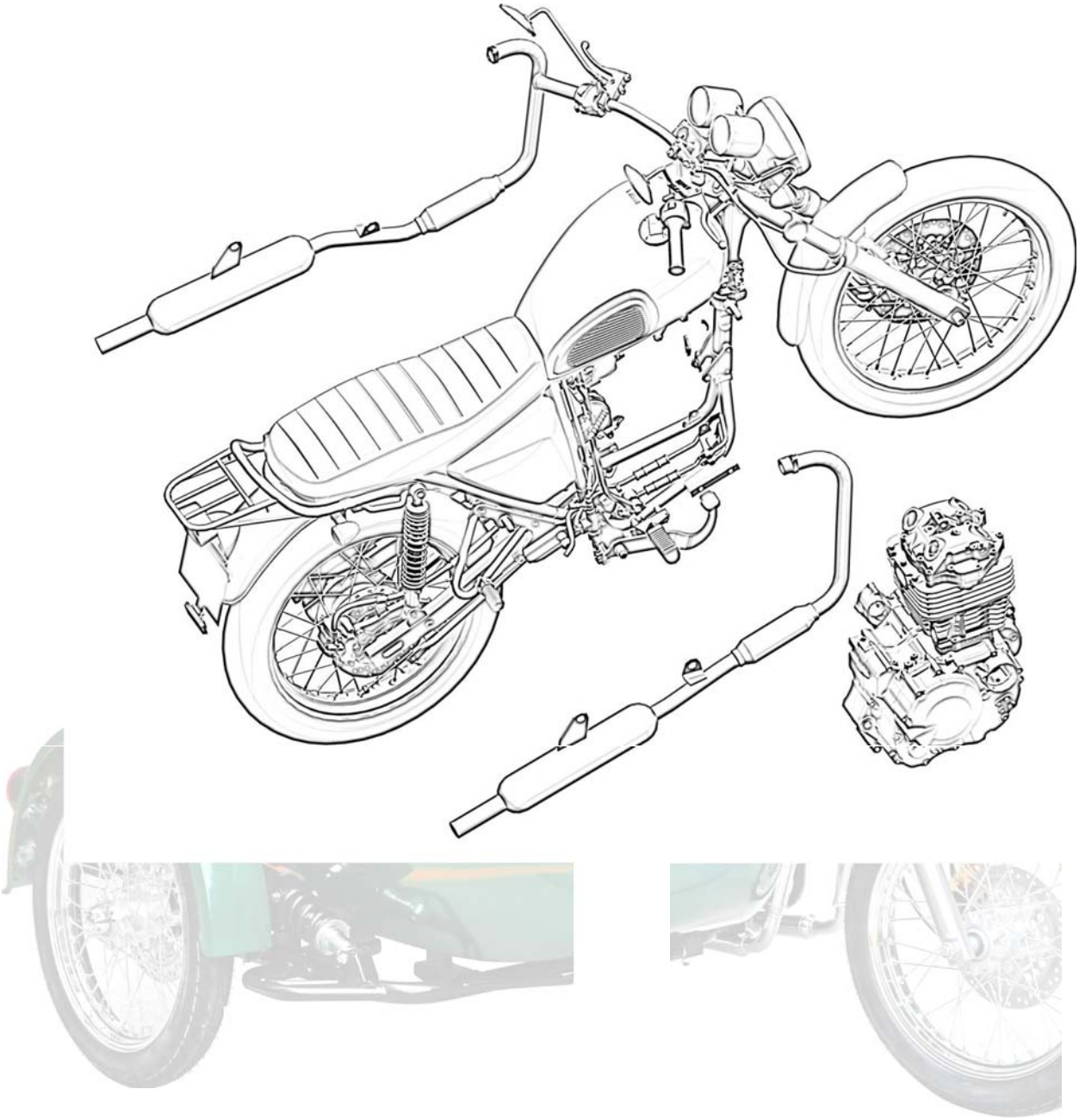

Removal and installation of engine

Maintenance notice	Installation of engine
Removal of engine	

Maintenance notice

It is only necessary to remove the engine from the frame when performing maintenance on the engine's crankshaft, balancing shaft, driving parts, etc. It is unnecessary to remove the engine from the frame when performing maintenance on other parts of the engine.

Before removing the engine, park the motorcycle on level ground, and completely drain engine lubricating oil.

To maintain the heat engine parts including cylinder head, cylinder body, piston, etc., it is necessary to remove the coverings, fuel tank, throttle body, air filter assembly, etc.

To remove the engine's right crankcase cover for maintenance, it is necessary to remove the basketcar, rear brake pedal, etc.

To remove the engine's left front cover for maintenance, it is necessary to remove the gear shift pedal, left rear cover, etc.

Installation is in the reverse order of removal.

While reinstalling, all wirings shall be carried out in accordance with the wiring diagram, and replace the removed buckle strip

Specification

Net weight of engine	**40kg**
Engine oil volume	**2.2L**

Key torque values

Engine hanging bolt	**M8: 20-30N.m**
	M10: 30-40N.m
Rear fork shaft	**60-70N.m**

Removal of engine

1. Park the motorcycle on the plane ground, and completely drain the engine lubricating oil.

2. Remove oil -out line and oil -in line

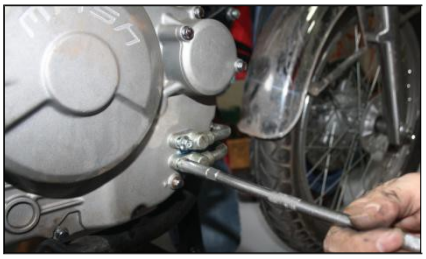

3. Remove basket cover, seat and fuel tank

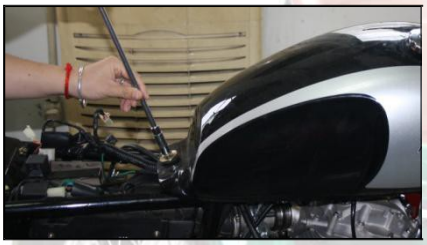

4. Remove muffler

- Remove oxygen sensor

- Remove muffler barrel body

- Remove the exhaust pipe

5. Remove radiator (refer to the related sections)

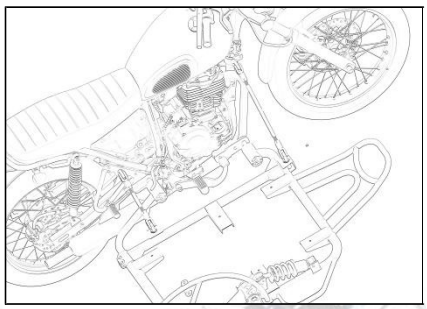

6. Remove engine cycle tube

7. Remove Left /Right cylinder head connecting pipe

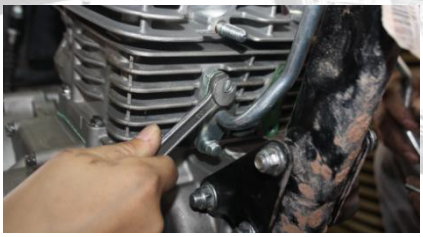

8. Detach the earth wire from the negative pole of the battery.

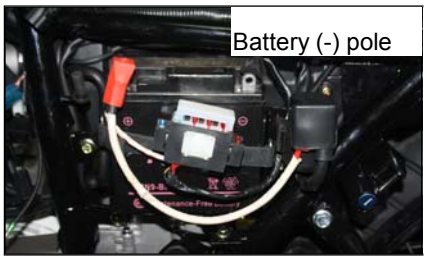

9. Remove clutch cable

10. Remove the starting motor wire.

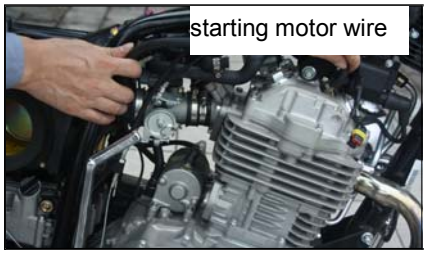

11. Remove the high voltage wire

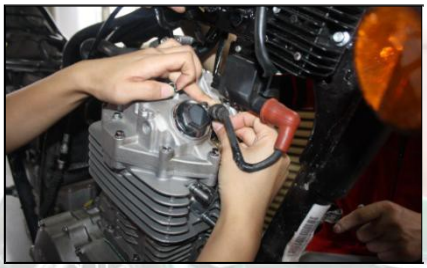

12. Remove the magnetic motor, gear display line and hit the line wire

13. Remove the gear shift pedal and left rear cover.

14. To remove the rear brake pedal

15. Pull off the engine sensor connector.

16. Remove the inlet pipe connected to the engine bolt

17. Remove the engine hanging plate.

- Upper suspension

- Front suspension

18. To take out the rear fork shaft and move the rear fork backwards:

- Remove the drive chain

- Remove the rear absorber and rear fork connecting bolt;
- Unscrew the nut and take out the rear fork shaft;
- Take out the rear fork backwards

19. Loosen the nut and remove the lower hanging bolt.

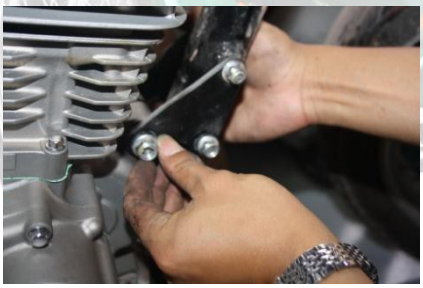

20. Move the engine slowly from the right.

Installation of engine

The installation of engine is in the reverse order of removal of engine.

During installation, note that the wiring of cable shall be in strict accordance with the wiring diagram.

Remove the 4 engine bracket and the frame connecting bolt

Remove the 2 front suspension bolt

Remove the 2 rear suspension bolt

Remove the drive chain

Move the engine slowly from the right.

6. Cylinder head, cylinder and piston

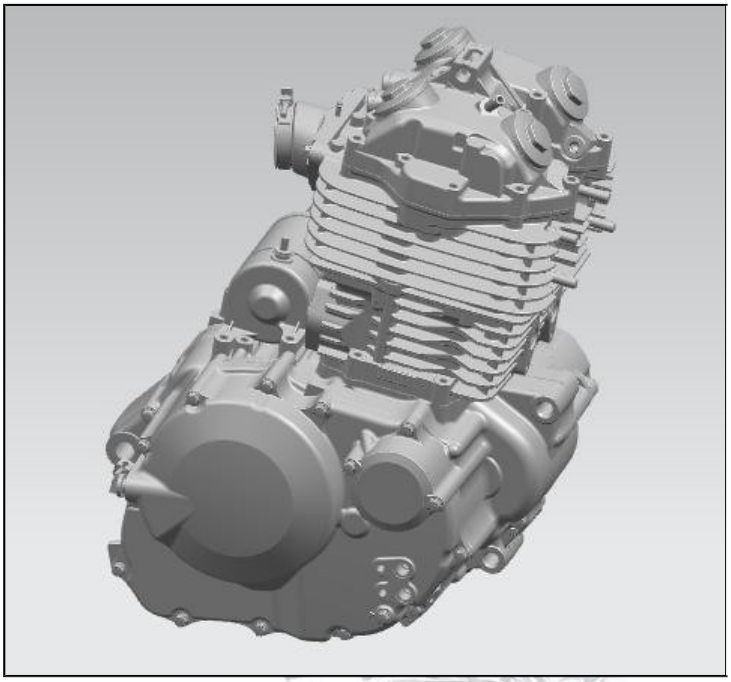

Cylinder head cover

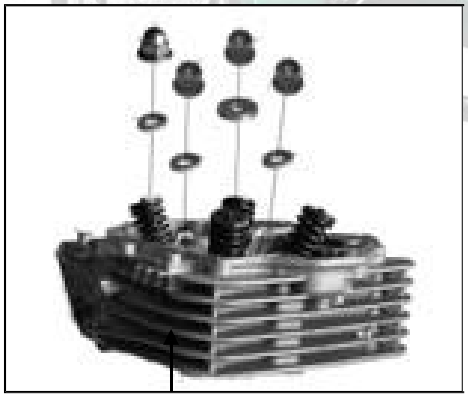

Cylinder head

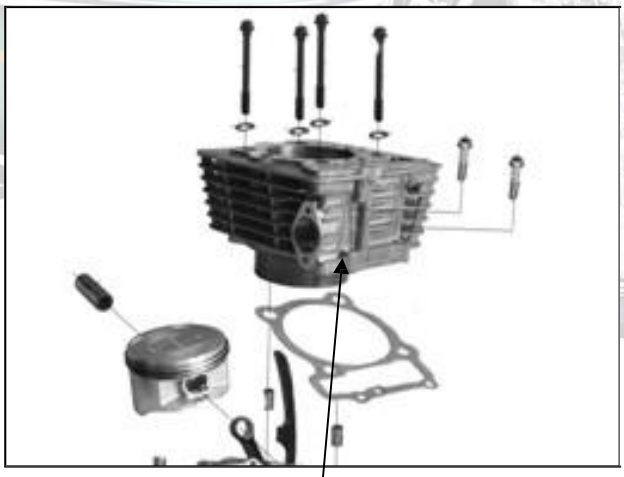

Cylinder

Cylinder head, cylinder and piston

Maintenance notice	Cylinder head
Troubleshooting	Cylinder
Cylinder head cover	Piston
Camshaft	

Maintenance notice

The lubrication of the camshaft and rocker arm is implemented by pumping oil by the oil pump through the oil troughs of the cylinder, cylinder head and cylinder head cover; before assembling, please check whether the oil troughs are unobstructed and clean them up properly.

Before assembling, clean all parts and components with cleaning agent and dry them with compressed air.

While assembling, coat engine oil and molybdenum disulfide lubricant on the protruding surface of the camshaft for preliminary lubrication.

Be careful not to damage the cylinder wall and piston.

Technical specifications & maintenance benchmark

Item		Standard value	Maintenance limit value
Camshaft	Camshaft lift: IN	5.5057 mm	5.3057mm
	Camshaft lift: EX	5.515mm	5.315mm
Cylinder head	Planeness	0.03	0.05mm
Valve spring	Internal spring free length	36.7mm	35.8mm
	External spring free length	43mm	41.89mm
Valve	IN Valve stem external diameter	Φ5.49mm ~ Φ5.475mm	Φ5.455mm
	Conduit inner diameter	Φ5.5mm ~ Φ5.512mm	Φ5.53mm
	EX Valve stem external diameter	Φ5.46mm ~ Φ5.445mm	Φ5.415mm
	Conduit inner diameter:	Φ5.5mm ~ Φ5.512mm	Φ5.53mm
Valve clearance	IN	0.08mm ~ 0.10mm	/
	EX	0.10mm ~ 0.12mm	/
Cylinder	Internal diameter	Φ85mm ~ Φ85.01mm	Φ85.1mm
	Roundness	/	0.05
	Cylindricity	/	0.05

	Top planeness	/	0.05
Piston and piston pin	Piston external diameter	Φ84.937mm ~ Φ84.927mm	Φ84.92mm
	Fit clearance with cylinder	0.01mm ~ 0.45mm	0.1mm
	Piston pin external diameter	Φ20mm ~ Φ19.994mm	Φ19.98mm
	Piston pin hole inbasket diameter	Φ20.002mm ~ Φ20.010mm	Φ20.05mm
	Fit clearance	0.002mm ~ 0.018mm	0.05mm
Connecting rod small end	Internal diameter	Φ20.03mm ~ Φ20.038mm	Φ20.06mm
	Clearance with piston pin	0.03mm ~ 0.044mm	0.07mm
Piston ring	First ring gap clearance	0.2mm ~ 0.35mm	0.65mm
	Second ring gap clearance	0.35mm ~ 0.55mm	0.7mm
	First ring basket clearance	0.02mm ~ 0.06mm	0.12mm
	Second ring basket clearance	0.02mm ~ 0.06mm	0.12mm
	Oil ring basket clearance	0.04mm ~ 0.16mm	0.4mm

Key torque values

Cylinder head cover connecting bolt	8-12 N.m
Cylinder bolt	40-50 N.m
Timing driven sprocket bolt	8-12 N.m
Spark plug	18-25 N.m
Pensioner plate fastening bolt	8-12 N.m

Troubleshooting

- Low cylinder pressure

1) Valve:

--Incorrect valve clearance adjusted;

--Valve ablated or bent;

--Valve sealing failure;

--Incorrect valve timing;

--Valve spring damaged.

2) Cylinder head:

--Spark plug sealing failure;

--Cylinder head gasket leaked or damaged;

--Cylinder head cracked or blistered.

3) Cylinder and piston:

--Piston ring clearance too big or cracked;

--Piston cracked or damaged;

--Cylinder / piston ring worn.

- Black smoke from exhaust

1) Valve guide worn;

2) Oil shield leaked or damaged;

3) Cylinder / piston / piston ring worn;

4) Piston ring clearance too big;

5) Piston ring incorrectly installed;

6) Piston or cylinder wall scratched or scuffed.

- Excessive noise

1) Incorrect valve adjustment;

2) Valve jammed or valve spring broken;

3) Camshaft worn or damaged;

4) Timing chain too long, worn or damaged;

5) Timing chain tensioned failure;

6) Timing driven sprocket worn;

7) Cylinder / piston worn;

8) Rocker arm / Rocker-arm shaft worn;

9) Piston pin bore / piston pin worn.

- Overheat / knocking (cylinder pressure too high)

1) Too much carbon deposited in combustion chamber.

Cylinder head cover

To remove the cylinder head cover:

1) Remove the lower / upper eyehole covers and turn the crankshaft so that the piston is at the upper dead point of the compression stroke.

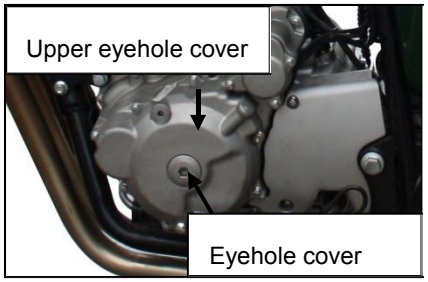

2) Remove the valve cover, connecting bolt, etc.

3) Remove the cylinder head connecting bolt.

4) Remove the cylinder head cover.

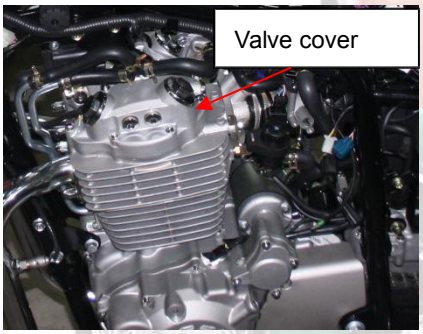

⚠ **Caution**

Do not drop the location pin into the crankcase.

To mount the cylinder head cover:

1) Turn the crankshaft so that the piston is at the upper dead point of the compression stroke.

2) Remember to confirm the location pin.

3) Mount the cylinder head cover and the sealing gasket.

4) Mount the cylinder head connecting bolt. ; tightening torque is 12N.m

5) Confirm the valve clearance, and make adjustment with a valve clearance adjusting tool as required.

6) Mount the valve cover, etc

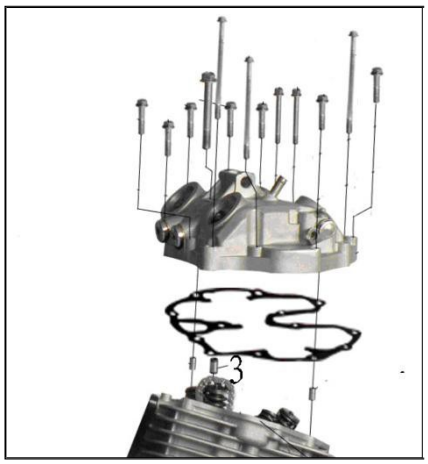

7) Connect the phase sensor and mount the eyehole cover and upper eyehole cover in turn.

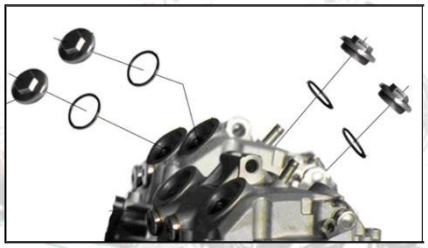

Camshaft

To remove the camshaft:

1) Remove the lower / upper eyehole cover and turn the crankshaft so that the piston is at the upper dead point of the compression stroke.

2) Remove the cylinder head cover (See Removal of cylinder head cover).

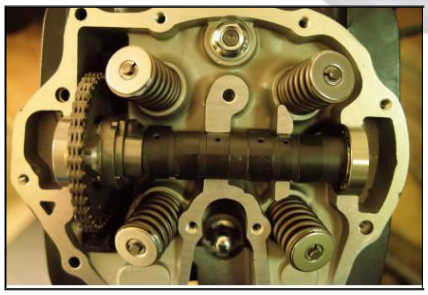

3) Remove the camshaft end cover, loosen the screw and washer at the tail end of the tensioner; turn the screw clockwise with the tensioner locking key so that the tensioner is loosened and locked.

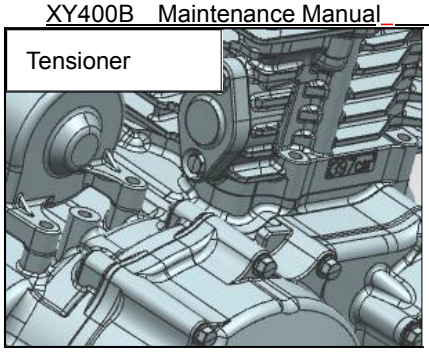

4) Remove the timing driven sprocket bolt

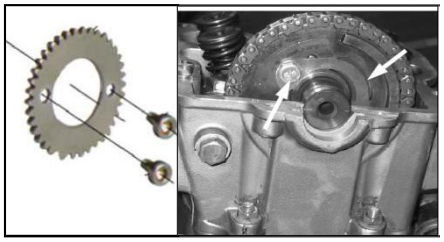

5) Remove the camshaft retaining pins

6) Remove the camshaft bearing

7) Strip the timing chain from the timing driven sprocket, and remove the timing driven sprocket.

8) Remove the camshaft

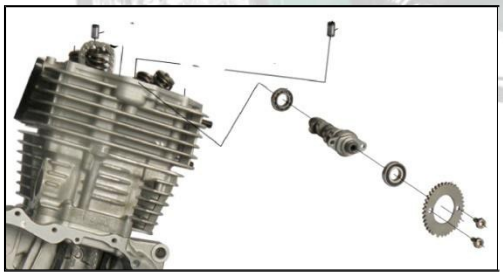

⚠Caution

Do not drop the timing chain into the crankcase.

To mount the camshaft:

1) Turn the crankshaft so that the piston is at the upper dead point of the compression stroke and the scale line “I” on the rotor is aligned with the triangular indication mark on the left front cover.

2) Clean all parts and components, coat the mixture of engine oil and molybdenum disulfide on the protruding surface of the camshaft, and coat oil engine on the journal part.

3) Mount the camshaft retaining pins, camshaft， camshaft bearings and timing driven sprocket; let the basic circle part of the camshaft facing up while timing.

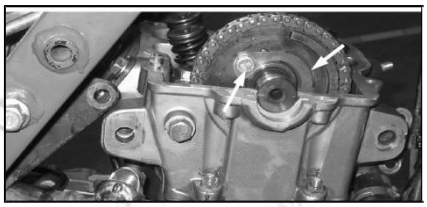

4) After properly timing, pull off the tensioner locking key and coat the mixture of engine oil and molybdenum disulfide on the tensioner to make it tensioned; mount the sprocket retaining plate and retaining bolt

5) Mount the bolt and washer at the tail end of the tensioner.

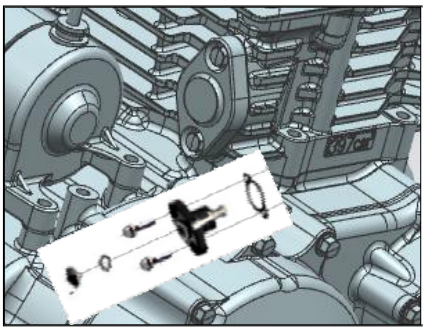

6) Mount the cylinder head cover (See Installation of cylinder head cover), and adjust the valve clearance

7) Connect the phase sensor and mount the eyehole cover and upper eyehole cover in turn.

⚠**Caution**

When the tensioner is not tensioned, never turn the crankshaft for fear of interlocking the teeth while timing.

Camshaft inspection

Check the camshaft for abrasion, damage, oil through jamming, etc. and check whether the decompressor flying block can rotate and return smoothly.

Measure the maximum IN / EX lift.

Maintenance limit: IN≥≥5.5057mm, EX ≥ 5.515mm

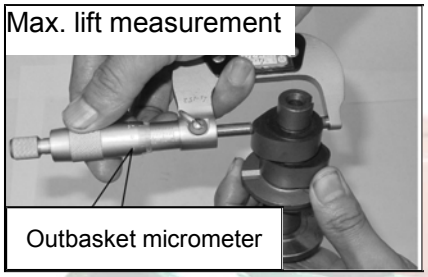

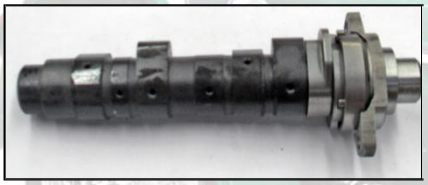

Cylinder head

To remove the cylinder head:

1) Remove the muffler exhaust pipe

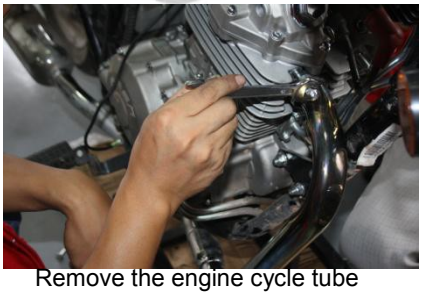

2) Remove the engine cycle tube

3) Remove Left /Right cylinder head connecting pipe

4) Pull off the spark plug cap,

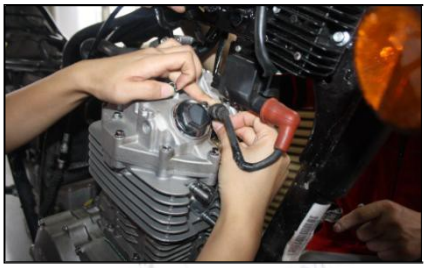

5) Unclamp the inlet pipe clip and remove the cylinder head hanging bolt.

6) Remove the cylinder bolt and washer.

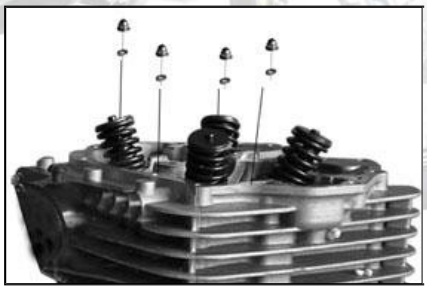

7) Remove the cylinder head and cylinder head gasket.

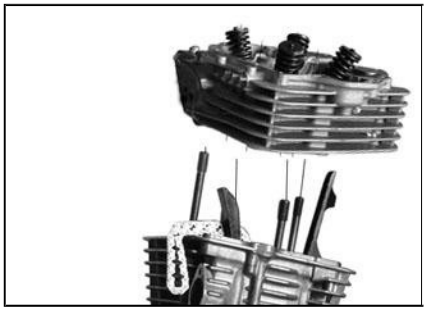

Caution

Do not drop the location pin into the crankcase.

To mount the cylinder head:

Installation is in the reverse order of removal. Precautions for installation:

1) Confirm the location pin; clean all parts and components, and check whether the cylinder head oil through is unobstructed, clean and free of leak.
2) Replace new cylinder head gasket
3) The tightening torque of cylinder bolt is 45N.m.

Warning:

The cylinder head bolt must be fully screwed up to the tightening torque of 45N.m, and carry out 100% torque inspection.

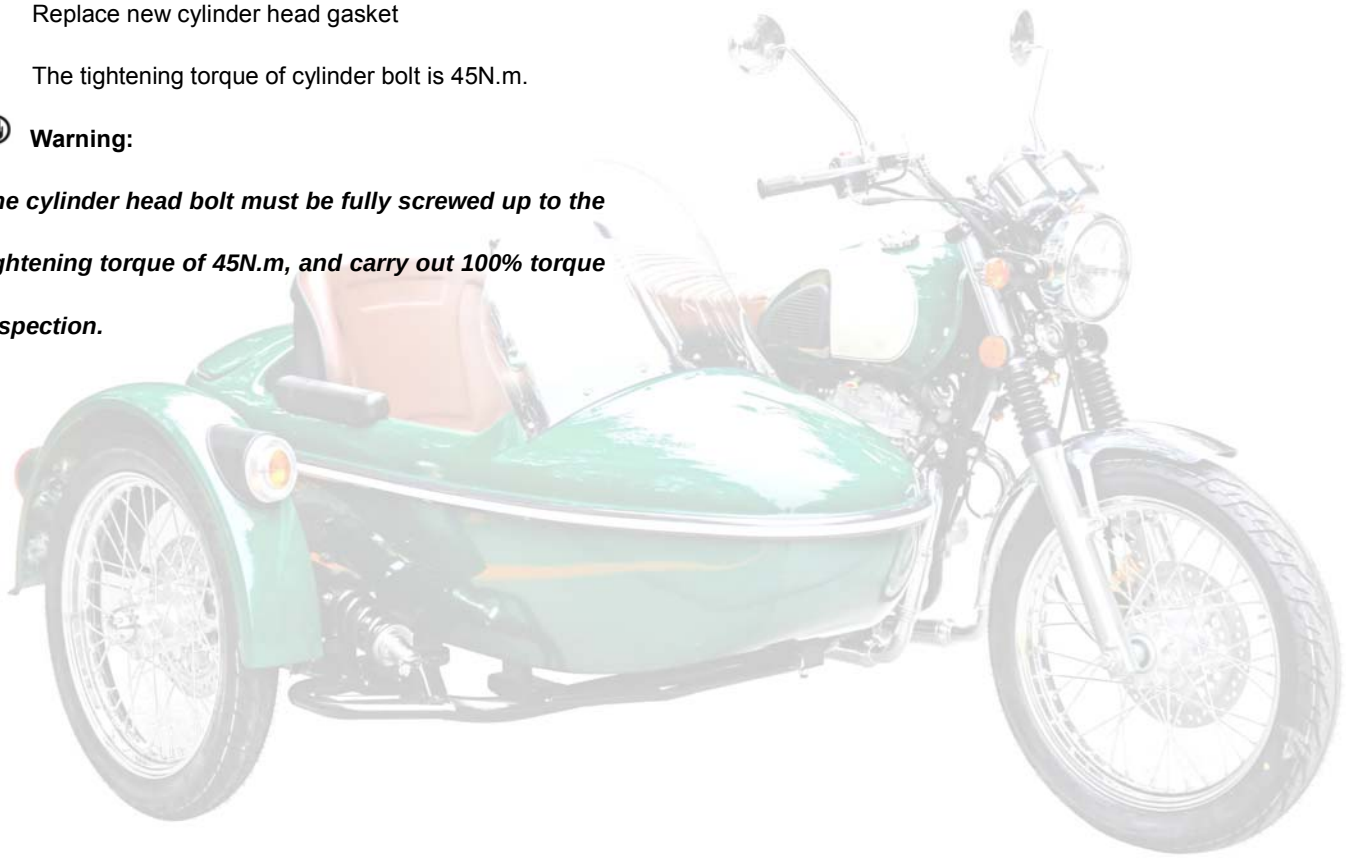

Disassembly and assembly of cylinder head

Disassemble and assemble the cylinder head according to the following diagram.

Use the valve remover / replacer

to remove and mount the intake valve and exhaust valve.
The spark plug must be tightened to the specified tightening torque of 15 ~ 20N.m for fear of leak.

While mounting the intake / exhaust valve, coat the mixture of engine oil and molybdenum disulfide on valve stem for preliminary lubrication.

While mounting the stud, please use specified thread retaining adhesive.

While mounting the valve spring, let the sparse end face up.

⚠**Notice:**

Do not damage the oil shield lip while mounting.

The valve lock clamp must be mounted in place; dropout of the valve lock clamp is dangerous.

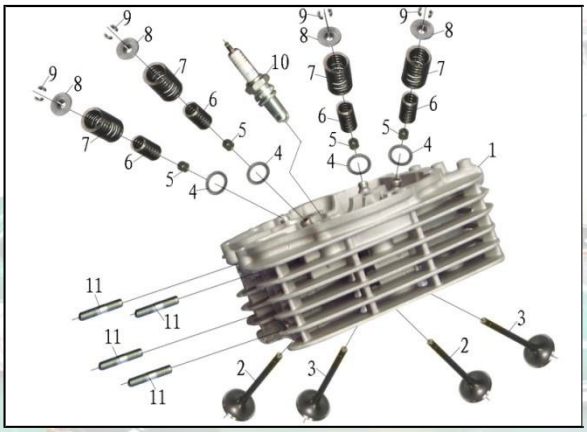

No.	Procedure	Quantity	Remarks
1	Cylinder head	1	
2	Exhaust Valve	2	Coat the mixture of engine oil and molybdenum disulfide on the stem while assembling
3	Intake valve	2	Coat the mixture of engine oil and molybdenum disulfide on the stem while assembling
4	Washer	4	
5	Oil shield	4	Assemble with sparse end facing up
6	Valve internal spring	4	Assemble with sparse end facing up
7	Valve external spring	4	Assemble with sparse end facing up
8	Upper spring seat	4	Replace it with a new one as required
9	Lock clamp	8	
10	Spark Plug	1	Replace it with a new one as required Tightening torque 18-25N.m.
11	Stud M8×38	4	Use thread retaining adhesive while assembling Tightening torque 8-12N.m.

Cylinder head inspection

Check whether the cylinder head is unobstructed, clean and free of leaks; check the cylinder head's spark plug hole and valve seat for cracks; insert the valve into the valve guide bore and move it up and down to check its movement; sway it back and forth and left and right to see whether there is significant sloshing.

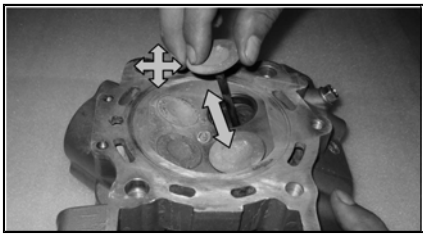

Check the cylinder head for deformation, and use the edge ruler and clearance gauge to inspect the planeness of the cylinder's joining surface.

Maintenance limit: ≤0.05mm.

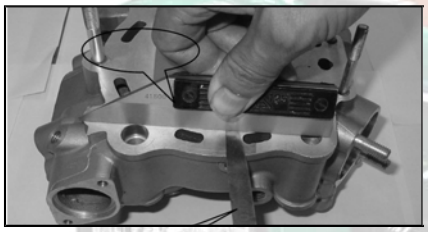

Measure the valve guide aperture.

Maintenance limit: ≤Φ4.53mm

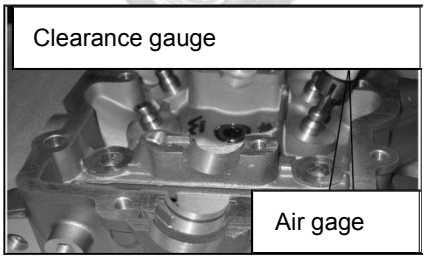

Measure the valve stem diameter.

Maintenance limit: IN≥Φ5.475mm,

EX ≥Φ5.445mm

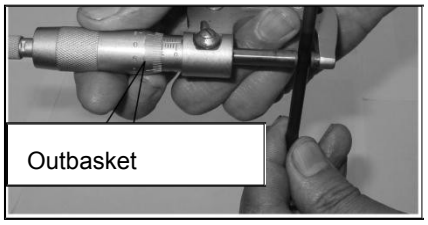

Measure the width of the valve contacting surface.

Maintenance limit: ≤1.7mm

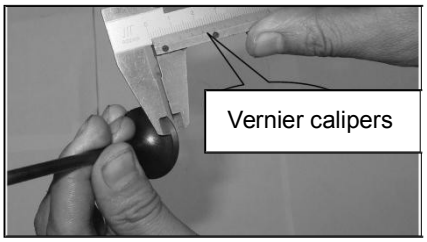

Measure the free length of the valve spring

Maintenance limit: Internal spring≥35.00mm

External spring ≥ 42.00mm.

Calculate the clearance between the valve stem and valve guide

Maintenance limit: IN≥0.09mm,

EX ≥0.10mm.

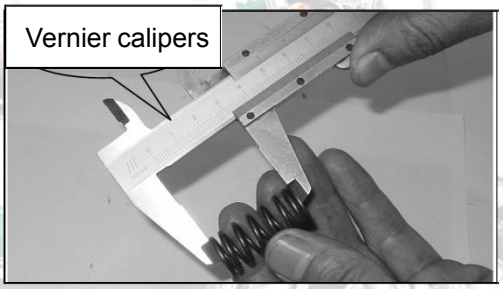

Cylinder

To remove the cylinder:

1) Remove the cylinder head cover (See Removal of cylinder head cover)
2) Remove the camshaft (See Removal of camshaft);
3) Remove the cylinder head (See Removal of cylinder head)
4) Remove the chain slide;
5) Remove cylinder connecting bolt
6) Remove the tensioner
7) Remove the cylinder; remove the cylinder gasket.

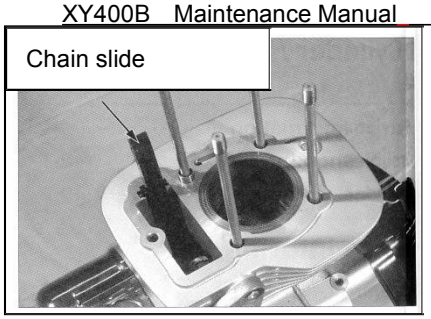

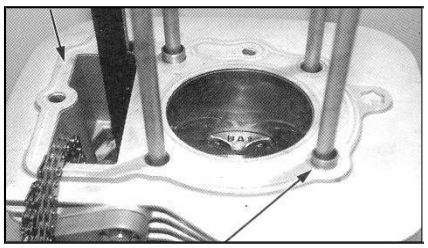

⚠**Notice:**

Do not drop the location pin into the crankcase.

Do not bruise the cylinder wall.

To mount the cylinder :

Installation is in the reverse order of removal. Precautions for installation:

1) Confirm the location pin; clean all parts and components, and check whether the cylinder oil through is unobstructed, clean and free of leak
2) Replace a new cylinder gasket, and confirm the notch direction of the piston ring; mount the cylinder after fastening the piston with the piston slide gage seat

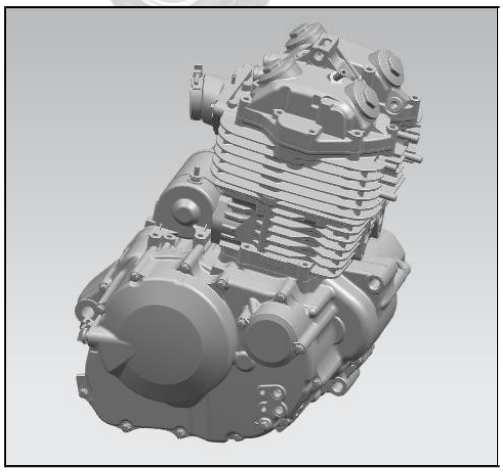

Cylinder inspection

Check the cylinder for abrasion or damage, and check the cylinder wall for scratch.

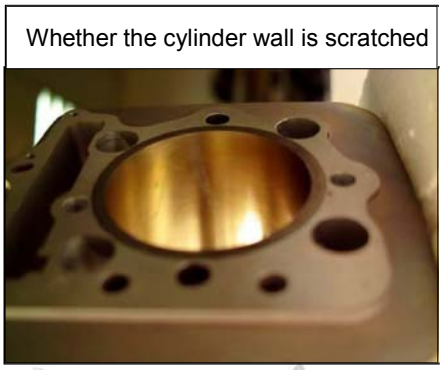

Check the cylinder wall for deformation, and use the edge ruler and clearance gauge to inspect the planeness of the cylinder's joining surface.

Maintenance limit: ≤0.05mm.

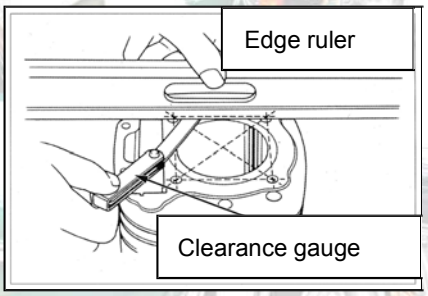

Measure the cylinder internal diameter. The measurement shall be made at three positions: top, middle and bottom, measure in two crossing directions for each position, and finally calculate their mean value.

Maintenance limit: ≤Φ85.10mm

Work out the Cylinder's grade slope.

Maintenance limit: ≤0.05mm

Work out the Cylinder's roundness.

Maintenance limit: ≤0.05mm

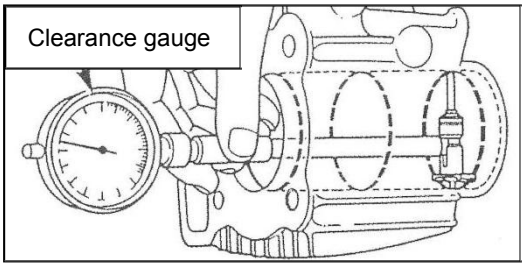

Piston

To remove the piston:

1) Remove the cylinder head cover (See Removal of cylinder head cover)
2) Remove the camshaft (See Removal of camshaft).
3) Remove the cylinder head (See Removal of cylinder head).
4) Remove the cylinder (See Removal of cylinder)
5) Remove the piston pin retainer at one basket, and pull out the piston pin.
6) Take out the piston.

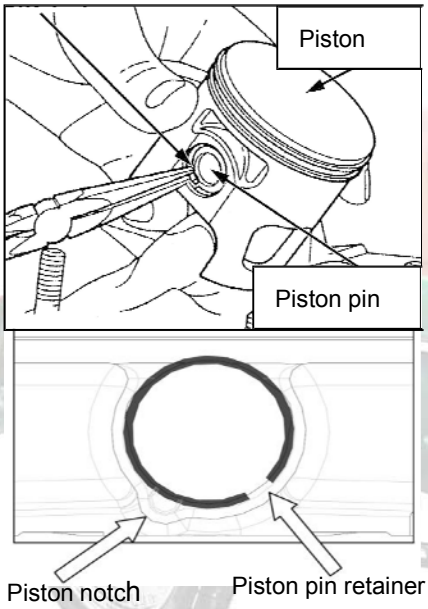

⚠ Notice:

Do not drop the piston pin retainer into the crankcase.

To mount the piston pin:

1) Coat engine oil on the piston pin surface and let the oil go through the piston and the small end bore of the crankshaft link rod.
2) Mount the new piston pin retainer, with the gap staggering the piston gap by more than 15°as shown in the above.
3) Mount the cylinder (See Installation of cylinder).
4) Mount the cylinder head (See Installation of cylinder head);
5) Mount the camshaft (See Installation of camshaft).
6) Mount the cylinder head cover (See Installation of cylinder head cover).

⚠ **Notice:**

Assemble the piston with the top basket with the marker "O" facing exhaust basket.

Do not drop the piston pin retainer into the crankcase.

Disassembly and assembly of piston:

Disassemble and assemble piston according to the following diagram.

While assembling, let the basket with marker face the top of piston; if the marker can not be clearly identified, judge according to the shape of the piston ring (as shown in the figure below). Stagger the piston ring gap by more than 120º

While assembling the oil ring, mount the corrugated ring first, then mount the lip rings at both baskets, with the corrugated ring joint staggering with both lip rings by 90°, and with the two lip rings staggering with each other by 180°

The piston pin retainer shall be replaced with new one while assembling after disassembling, and stagger the gap and the piston notch by more than 15°.

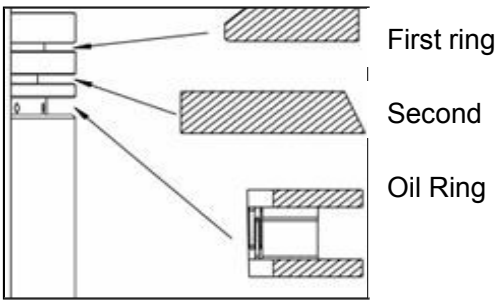

⚠ **Notice:**

Do not damage the piston pin and piston ring.

Do not reverse the mounting position of the first ring (ATG marker) and second ring (A marker).

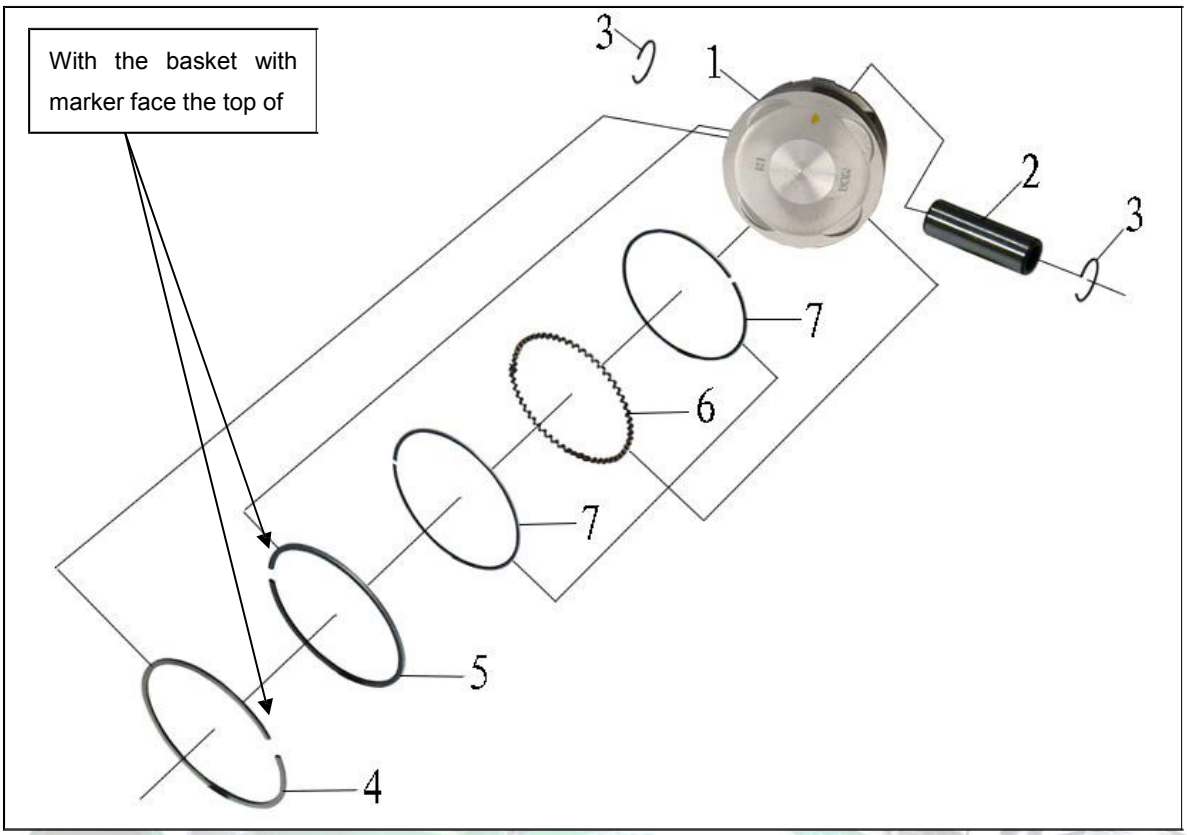

No	Procedure	Quantity	Remarks
	Sequence of disassembling		Assembling is in the reverse order of disassembling.
1	Piston	**1**	
2	Piston pin	**1**	
3	Piston pin retainer	**2**	Replace it with a new one while assembling
4	First ring	**1**	
5	Second ring	**1**	
6	Corrugated ring	**1**	
7	Lip ring	**2**	

Piston inspection

Check the piston for abrasion or damage, cracks, etc. and check the skirt section for scratch.

Measure the piston external diameter at the position 10mm above the piston skirt.

Maintenance limit: ≥Φ84.87mm

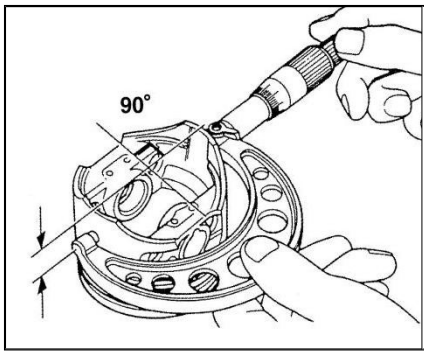

Measure the piston pin hole inbasket diameter.

Maintenance limit: ≤Φ20.05mm.

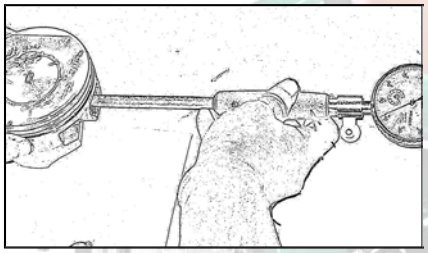

Measure the clearance between the piston ring and the piston groove before removing the piston ring.

Maintenance limit: First ring / Second ring≤0.12mm, Oil ring ≤0.40mm.

Mount the piston rings into the cylinder respectively and measure the gap clearance. Maintenance limit: First ring≤ 0.65mm, Second spring ≤0.7mm.

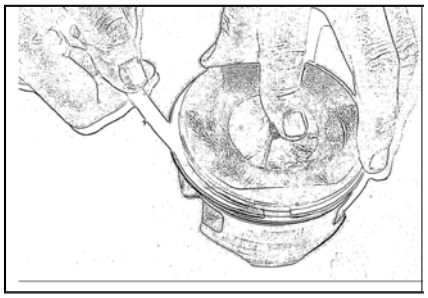

Measure the piston pin external diameter.

Clearance gauge

Maintenance limit: ≥Φ19.98mm

Work out the clearance between the cylinder and piston.

Maintenance limit: ≤0.10mm.

Work out the clearance between the piston and piston pin.

Maintenance limit: ≤0.07mm.

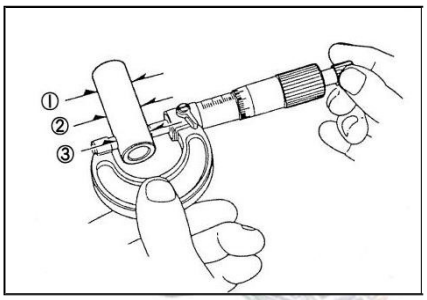

7. Clutch and Right crankcase cover

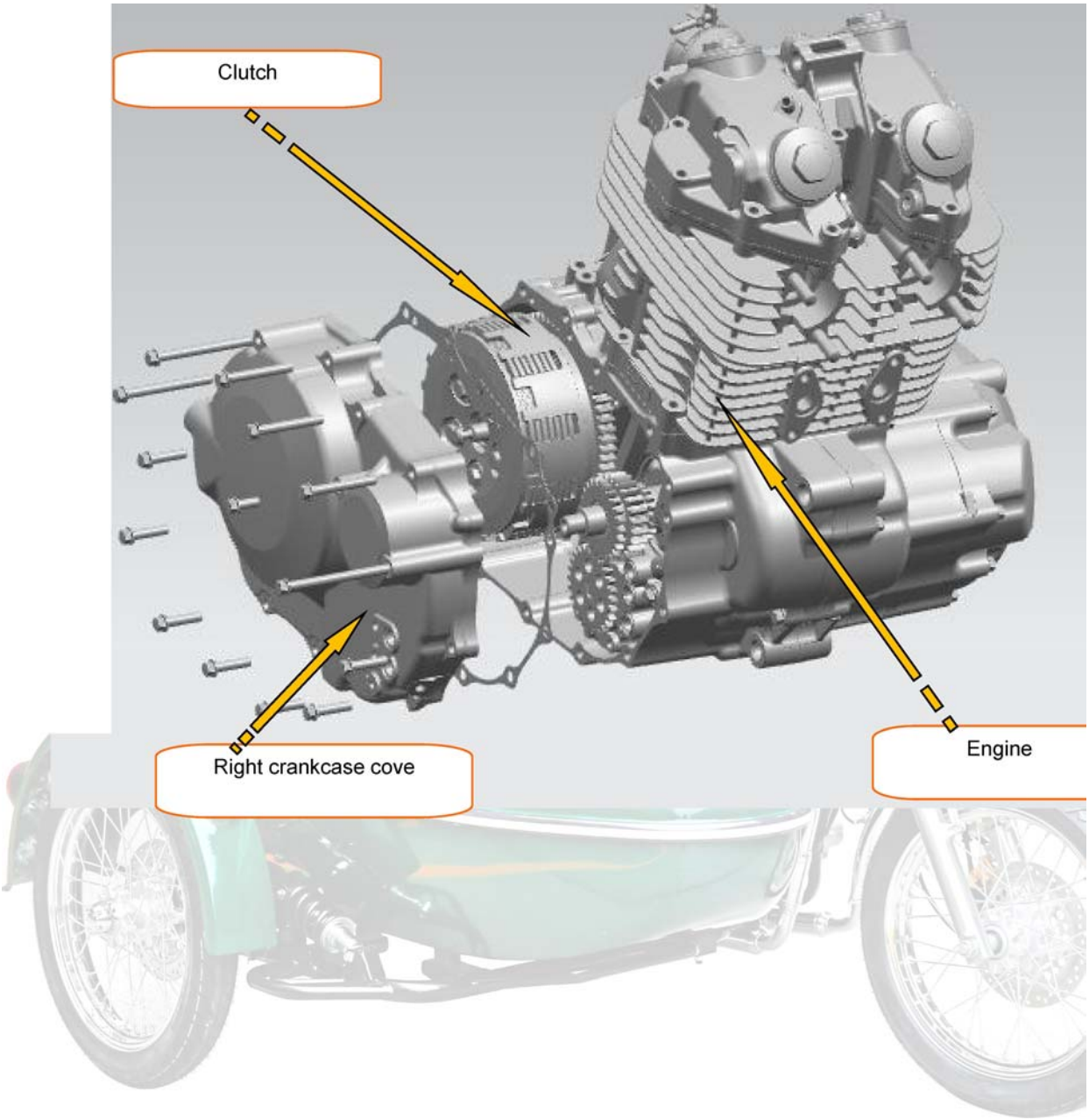

Clutch and Right crankcase cover

Maintenance notice	Clutch
Troubleshooting	Right crankcase cover

Maintenance notice

To carry out the maintenance stated herein, it is unnecessary to detach the engine from the frame. However, the engine lubricating oil must be discharged.

Remove the protecting shield, and loosen the rear brake cylinder body, rear brake lamp switch and spring and rear brake return spring, and then pull out the rear brake pedal.

Before assembling, clean all parts and components with cleaning agent and dry them with compressed air.

To assemble the clutch, loosen the clutch spring and coat engine oil on the clutch disc; in case of replacing new clutch, the clutch disc must be soaked in oil for over 24 hours before being assembled.

Be careful not to damage the crankshaft seal on the right crankcase cover.

Technical specifications & maintenance benchmark

	Item	Standard value	Maintenance limit value
Clutch	Handle free stroke	10 ~ 20	/
	Spring free length	39.74	38.7
	Disc thickness	3.0	2.8
	Disc planeness	/	/
	Clutch plate thickness	1.4	/
	Clutch plate planeness	0.10	0.20

Key torque values

Clutch retaining nut	114-126N.m
Primary driving gear fastening nut	143-157N.m
Clutch lift plate fastening nut	8-12N.m

Troubleshooting

- **Clutch**

In case of clutch operation failure, a better correction may usually achieved by adjusting the clutch handle free stroke.

- **Clutch slipping while accelerating**

  1) Insufficient free stroke;
  2) Clutch disc abrasion;
  3) Clutch plate deformed or bent;
  4) Clutch spring failure.

- **Excessive handle pressure**

  1) Clutch cable galling, damaged or dirty;
  2) Clutch push rod damaged or jammed.

- **Hard clutch operation**

  There is burr on clutch housing chute.

- **Shift lever can't return**

  1) Return spring cracked or slipped;
  2) Transmission shaft plate convenes with crankcase or crankcase cover.

- **Vehicle moves slowly upon firmly grabbing the handle**

  1) Excessive handle free stroke
  2) Clutch plate deformed or bent.

- **Hard shifting or impossible to shift**

  1) Locating plate bent;
  2) Stopping plate assembly damaged or cracked;
  3) Shifting yoke cracked or slipped;
  4) Clutch improperly adjusted.

Right crankcase cover

To remove the cylinder head cover:

1) Loosen the right shaft axle box cover external tubing bolt.

2) Remove the oil drain plug to drain the engine oil inbasket the crankcase.

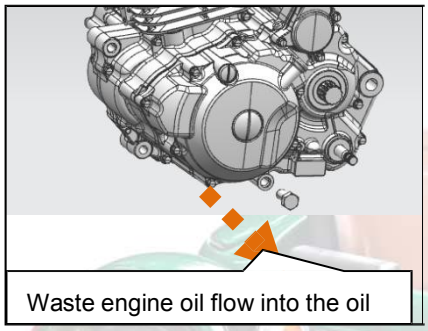

3) Separate the clutch control line with the clutch operating lever

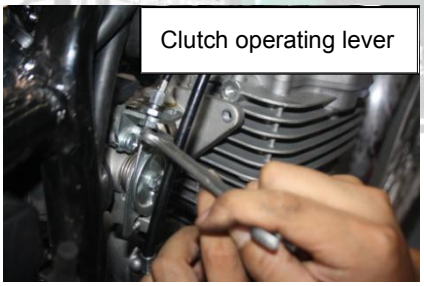

4) Remove the oil filter cover.

5) Remove the right crankcase cover connecting bolt

6) Take out the right crankcase cover component.

7) Take out the right crankcase cover sealing paper gasket

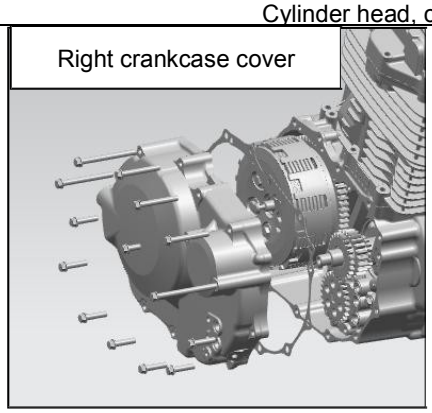

To install the right crankcase cover:

1) Confirm the location pin; clean up the residual sealing paper gaskets on the right crankcase and right crankcase cover.

2) Replace with a new right crankcase cover sealing paper gasket.

3) Mount the right crankcase cover.

4) Mount the oil filter cover.

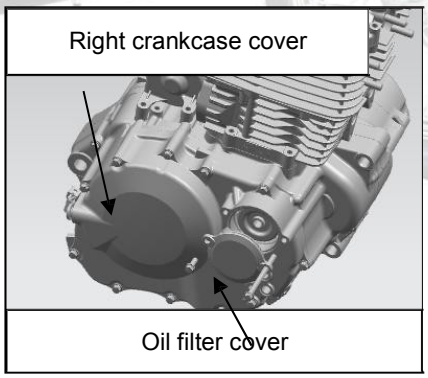

5) Mount the right shaft axle box cover external tubing bolt

6) Adjust the direction of the clutch operating lever, Mount the clutch operating lever, rear brake return spring, cotter pin, rear brake lamp switch, etc.

7) Refill engine oil.

Notice:

Do not scrape the crankshaft oil seal.

Assemble only when the rack basket of the clutch push rod faces the crankshaft.

Disassembly and assembly of right crankcase cover

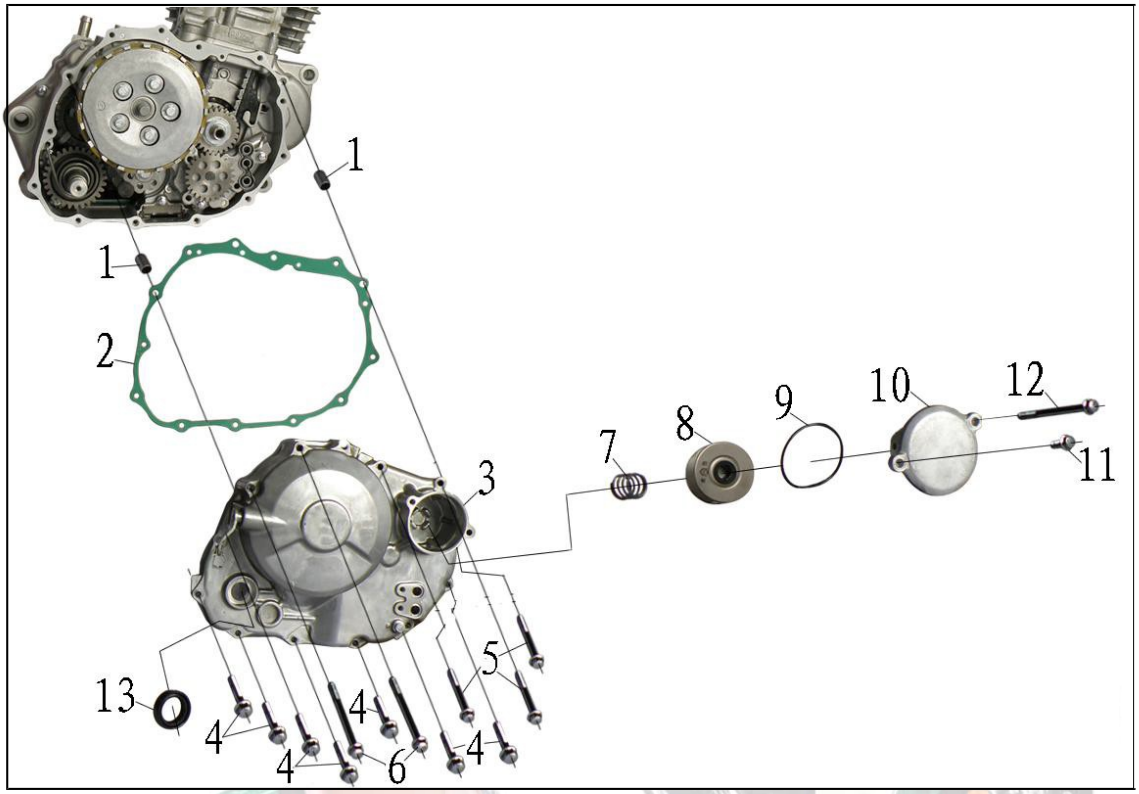

No	Procedure	Quantity	Remarks
	Removing order		**Installation is in the reverse order of removal**
1	The positioning pin	2	
2	Right crankcase cover sealing paper gasket	1	Replace it with a new one while assembling
3	Right crankcase cover	1	
4	Bolt M6*28	7	
5	Bolt M6*45	3	
6	Bolt M6*65	2	
7	Spring, filter gauze	1	
8	Engine oil filter element	1	
9	O-shaped sealing ring	1	Replace it with a new one as required
10	Filter cap	1	
11	Filter cap bolt M6*16	1	
12	Filter cap bolt M6*75	1	
13	Oil seal, start axes 20x30x7	1	Replace it with a new one as required

Clutch

To remove the clutch:

1) Remove the right crankcase cover (See “Removal of right crankcase cover").

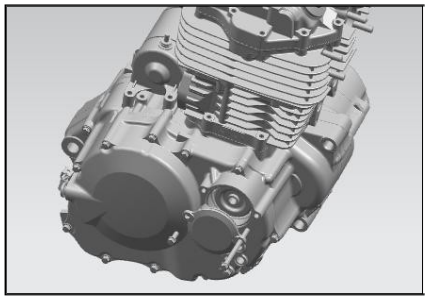

2) Remove the clutch push rod with the clutch push rod extractor S TOOL .

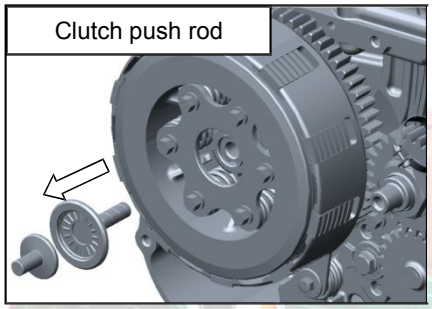

3) Use the fastening tool S TOOL to clamp the primary driving and driven gear, and remove the nut M18 and butterfly washer.

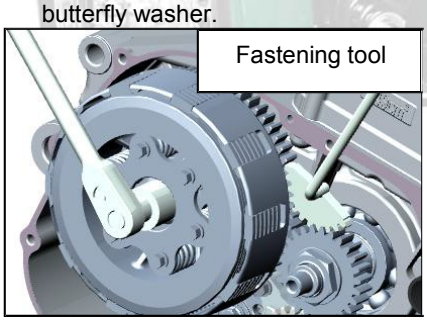

4) Remove the clutch.

5) Remove the clutch washer.

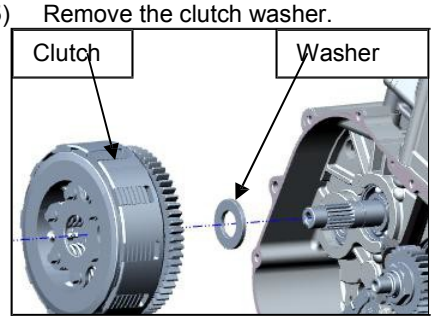

To install the clutch:

1) Mount the clutch washer with the sabotage basket facing the main shaft right bearing.

2) Mount the clutch.

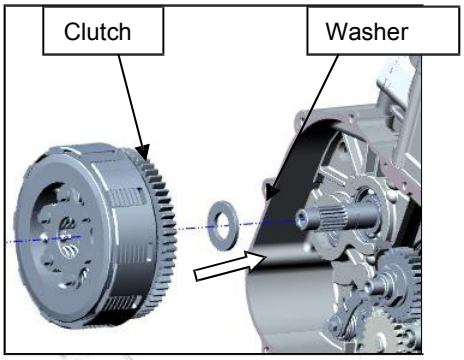

3) Mount the butterfly washer and retaining nut M18. Note to assemble with the protruding basket of the butterfly nut washer facing outbasket.

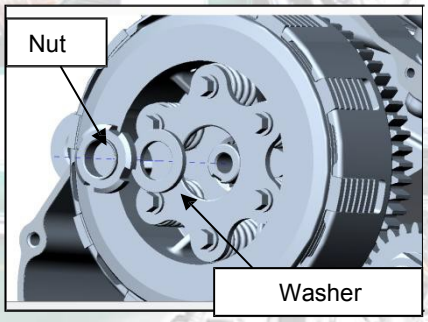

4) Use the fastening tool S TOOL to clamp the primary driving and driven gear, and screw up the retaining nut M18 to the tightening torque of 120N.m.

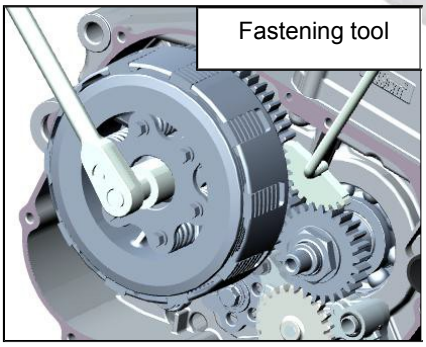

5) Mount the clutch push rod with the clutch push rod

assembler S TOOL

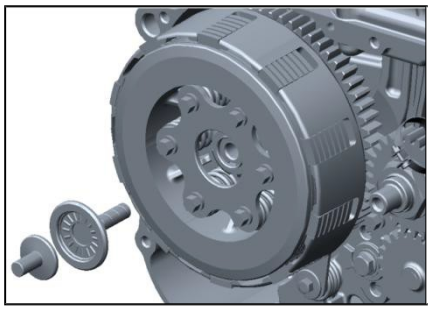

6) Assemble the right crankcase cover by turning the

clutch push rod until its rack basket faces the crankshaft.

(See “Installation of right crankcase cover").

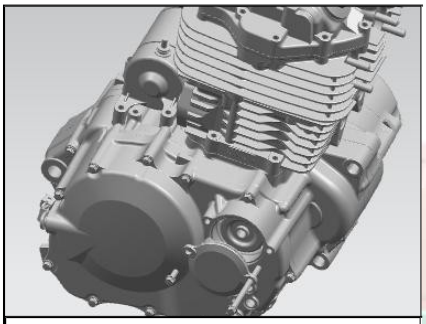

Right crankcase cover

Warning

Thread retaining adhesive LOCTITE243 must be coated on the clutch retaining nut M18 while assembling, with the tightening torque being 120N.m.

Removal / Installation of Clutch

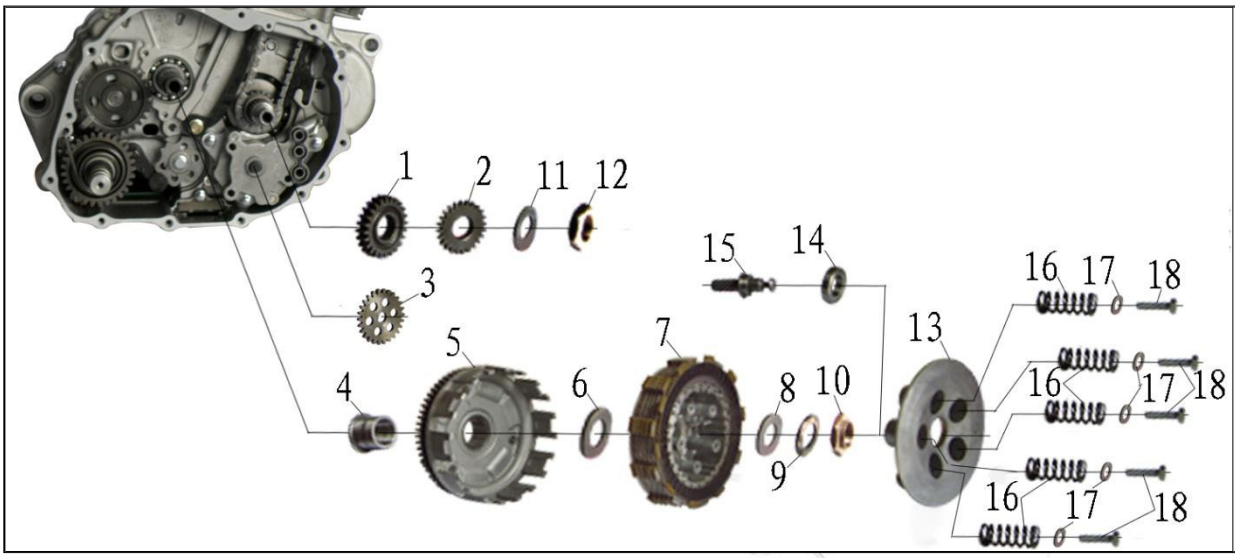

No	Procedure	Quantity	Remarks
	Removing order		**Installation is in the reverse order of removal**
1	Primary driving gear	**1**	
2	Oil pump drive gear	**1**	
3	Oil pump driving gear	**1**	
4	Bushing	**1**	
5	Clutch housing	**1**	Do not further disassemble
6	Clutch washer 22x35x2	**1**	Assemble with the sub stage basket facing inwards
7	Drive Disc Comp., Clutch	**1**	
8	Clutch washer	**1**	
9	Butterfly washer	**1**	
10	Nut M18 x1	**1**	Use fastening tool while removing and use thread retaining adhesive while assembling LOCTITE 243, with the tightening torque being 120N.m
11	Washer 18.2x32.2x2	**1**	
12	Nut M18 x1	**1**	With the tightening torque being 150N.m
13	Clutch pressure plate	**1**	
14	Bearing6002	**1**	
15	Pusher, Clutch	**1**	
16	Clutch spring	**5**	
17	Washer	**5**	
18	BoltM6X35	**5**	With the tightening torque being 15N.m

Disassemble and assemble of clutch

Disassemble and assemble the clutch according to the following diagram.

While removing the clutch lift plate, alternatively loosen the 6connecting bolts to avoid damage of cracking due to uneven force of the clutch spring.

While mounting the clutch lift plate, alternatively loosen the 6 connecting bolts to the specified torque. Assemble with the

protruding basket of the butterfly washer facing the plain washer

While assembling, the clutch disc must be coated with lubricating oil; in case of replacing new clutch disc, it must be soaked in oil for over 24 hours before being assembled. Do not further disassemble the clutch housing, otherwise damage will occur.

Explanation:

While unscrewing bolt, do it in a crossing way twice or thrice. Do in the same way for screwing up bolt.

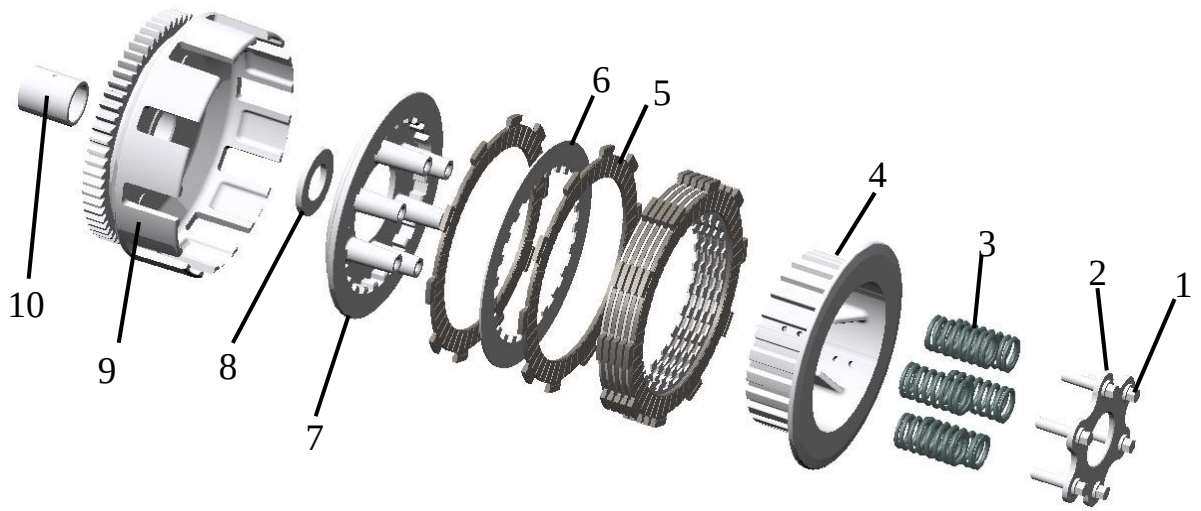

No	Procedure	Quantity	Remarks
	Removing order		**Installation is in the reverse order of removal**
1	Bolt	**6**	Tightening torque 12N.m.
2	Clutch lift plate	**1**	
3	Clutch spring	**6**	
4	Clutch central sleeve	**1**	
5	Disc	**7**	Gum base, soaking oil while assembling
6	Clutch plate	**7**	
7	Clutch cushion plate	**1**	
8	Plain washer	**1**	
9	Bushing	**1**	
10	Clutch washer	**1**	Assemble with the sub stage basket facing inwards

Clutch inspection

1) Check whether the housing splice has scars or cuts due to the collision of clutch disc.

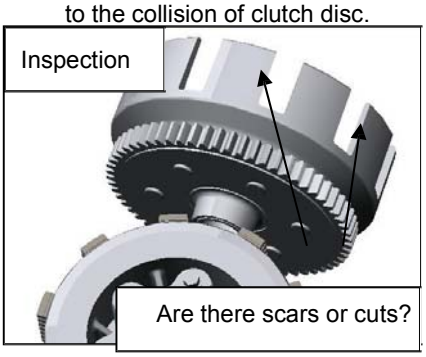

2) Check the clutch disc. If there is a scratch or de pigment or a strong scorching smell, replace it. Measure the thickness of each clutch disc.

Maintenance limit: ≥2.8mm.

Disc thickness measurement

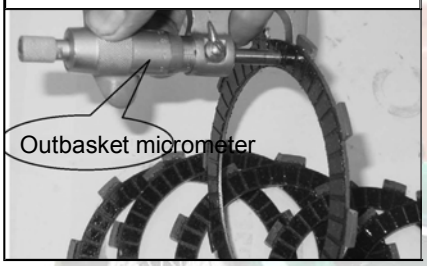

3) Check the clutch plate for distortion, and check the planners with a clearance gauge.

Maintenance limit: ≤0.20mm.

Clutch plate planners measurement

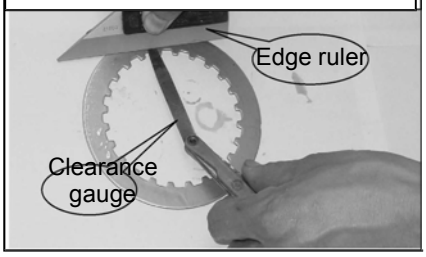

4) Measure the thickness of each clutch plate. The thickness is 1.4mm.

Clutch plate thickness measurement

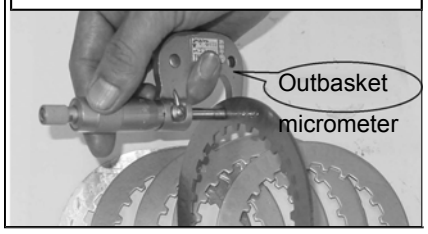

5) Measure the free length of the clutch spring.

Maintenance limit: ≥41.3mm.

Clutch spring free length measurement

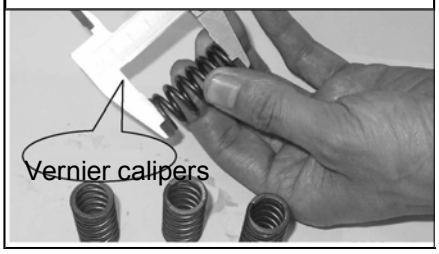

8. Magneto and starting system

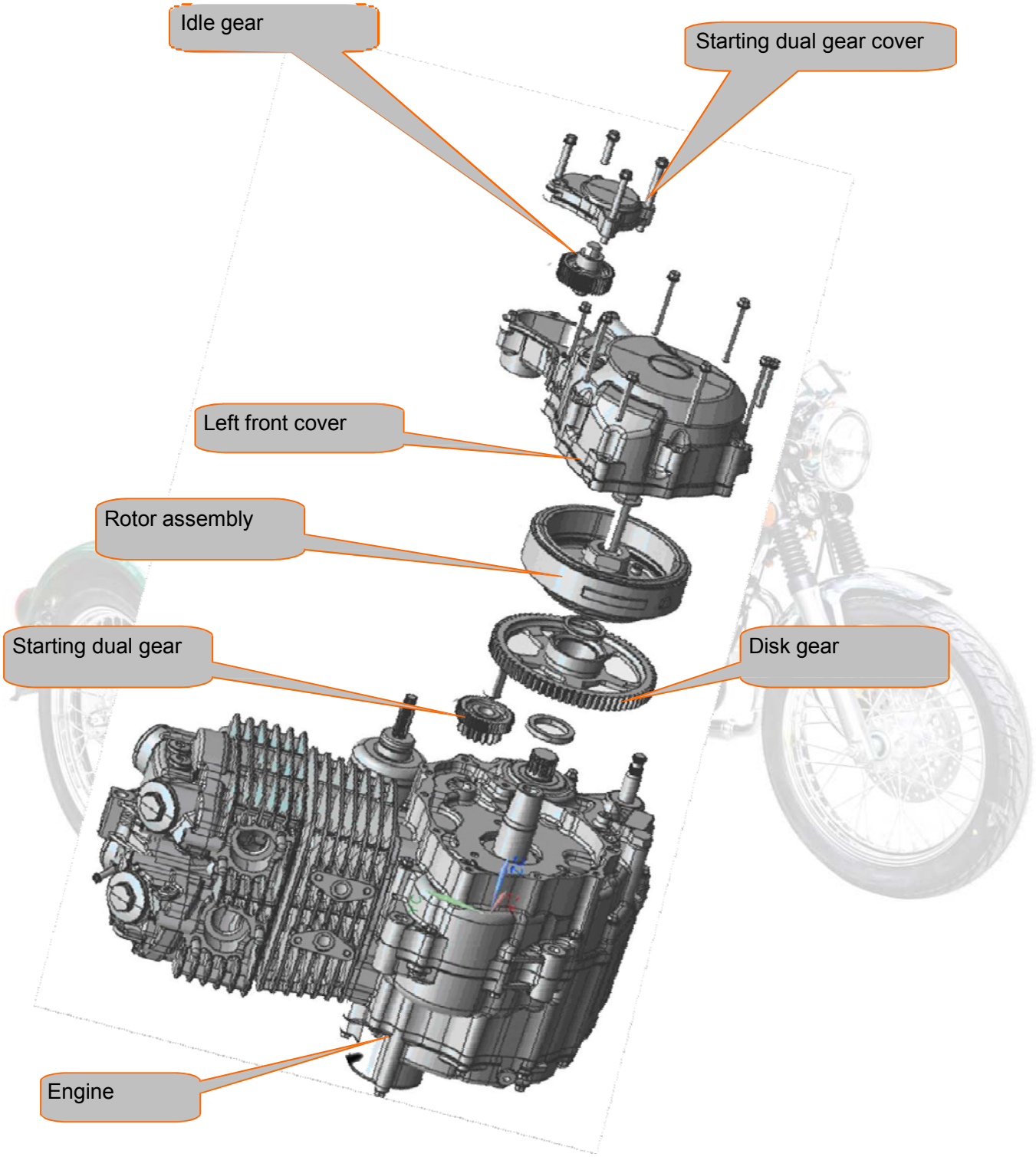

Magneto and starting system

Maintenance notice	Rotor assembly
Left front cover	Starting motor and starting transmission system

Maintenance notice

To carry out the maintenance stated herein, and the engine lubricating oil must be drained.。

Before assembling, clean all parts and components with cleaning agent and dry them with compressed air.

When mount, Mount the parts, coat the mixture of engine oil and molybdenum disulfide onto the left crank journal, as the initial lubrication。

Do not dent the seal surface, and do not damage the stator coil.

Technical specifications & maintenance benchmark

Item		Standard value	Maintenance limit value
Disk gear	Disk gear external diameter	Φ51.67 ~ Φ51.7	Φ51.57
One-way device outer body	One-way device outer body internal diameter	Φ35 ~ Φ35.027	Φ35.040
Disk gear washer	Washer thickness	5.65 ~ 5.75	5.6

Key torque values

Rotor fastening nut	**36 ~ 45N.m**
Stator fastening bolt	**8-12N.m**
Pressure plate fastening bolt	**7 ~ 10N.m**
Starting clutch connecting screw	**8 ~ 12N.m**

Left front cover

To remove the left front cover:

1) Remove the gear shift pedal and left rear cover, and separate the magneto lead connector with the main cable.

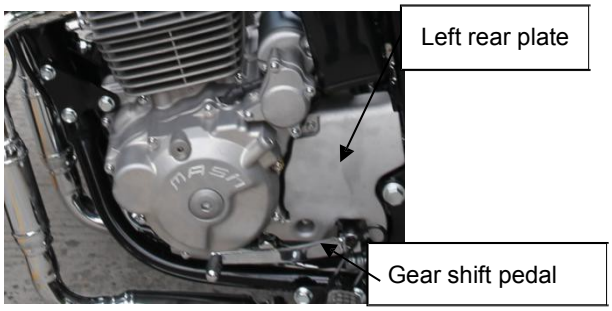

2) Unscrew the oil drain plug to drain the engine lubricating oil inbasket the engine

3) Remove the Starting dual gear cover connecting bolts

4) Remove the Starting dual gear cover..

5) Remove Starting dual gear, shaft, sealing paper gasket.

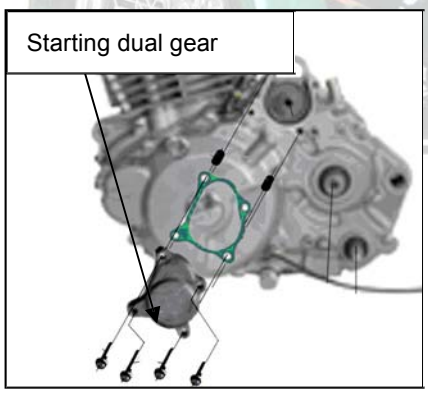

6) Remove the left front cover.

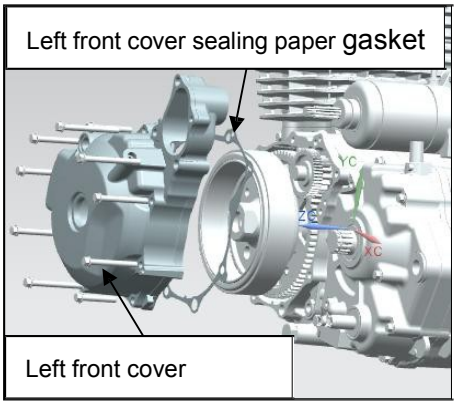

Disassembly and assembly of left front cover

Disassemble and assemble the left front cover according to the following diagram.

Use the thread retaining adhesive LOCTITE 648 while assembling the pressure plate bolt.

Use the thread retaining adhesive LOCTITE 648 while assembling the magneto stator connecting bolt.

O In case of O-ring aging, prolonging or deforming, replace it.

⚠ **Notice:**

Do not dent the seal surface, and do not damage the stator coil.

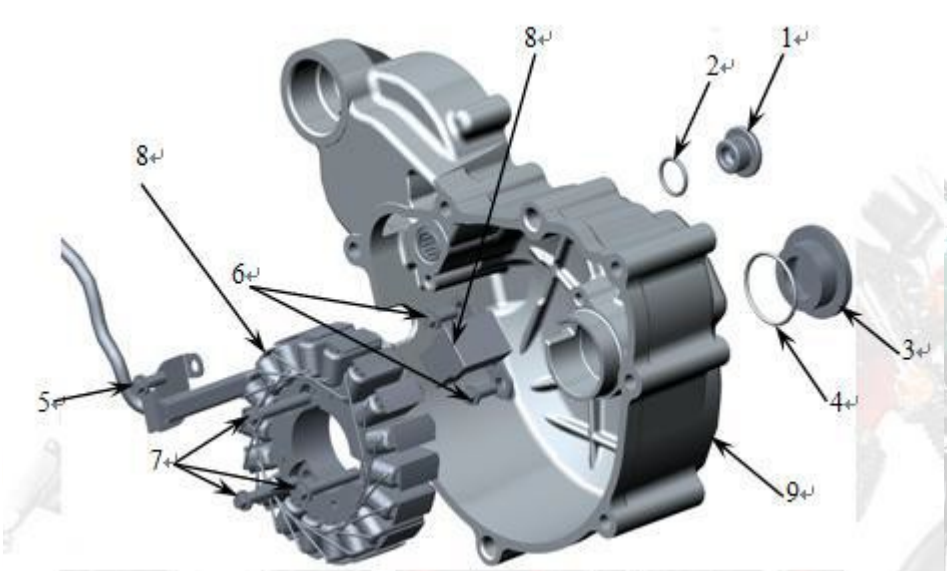

No	Procedure	Quantity	Remarks
	Removing order		**Installation is in the reverse order of removal**
1	Upper eyehole cover	1	
2	O-shaped sealing ring	1	Replace it with a new one as required
3	Eyehole cover	1	
4	O-shaped sealing ring	1	Replace it with a new one as required
5	Bolt M6x16	1	Use thread retaining adhesive LOCTITE 648 while assembling
6	Bolt (small pan head) M6x16	2	Use thread retaining adhesive LOCTITE 648 while assembling
7	Bolt (small pan head) M6x32	3	Use thread retaining adhesive LOCTITE 648 while assembling
8	Pressure plate	1	
9	Left front cover	1	

Rotor assembly

To remove the clutch:

1) Remove the left front cover (See Removal of left front cover).

2) Remove the starting idle gear, Starting dual gear, etc

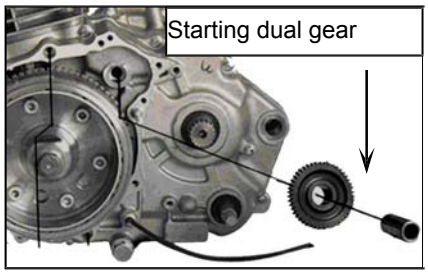

3) Use the rotor fastening tool (S TOOL) to fasten the rotor, and remove the fastening nut M12 and plain washer.

4)

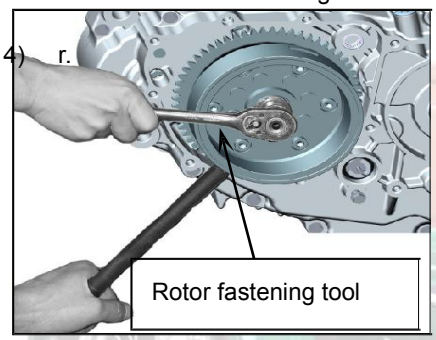

5) Use the rotor extractor (S TOOL) to extract the rotor..

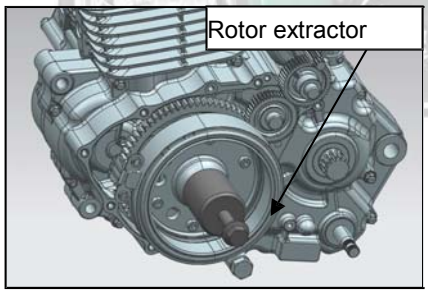

6) Remove the rotor assembly washer、 disk gear,needle bearing, disk gear washer

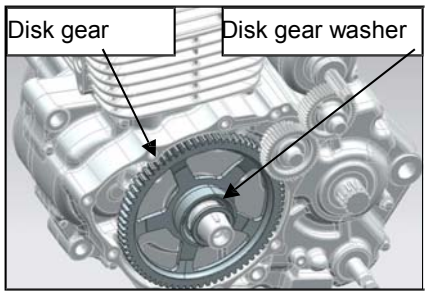

Notice:

Do not let the semicircular key drop into the crankcase.

Disassembly and assembly of rotor assembly

Disassemble and assemble the rotor assembly according to the following diagram.

Use thread retaining adhesive LOCTITE 648 on the screw while assembling, with the tightening torque being 10-14N.m

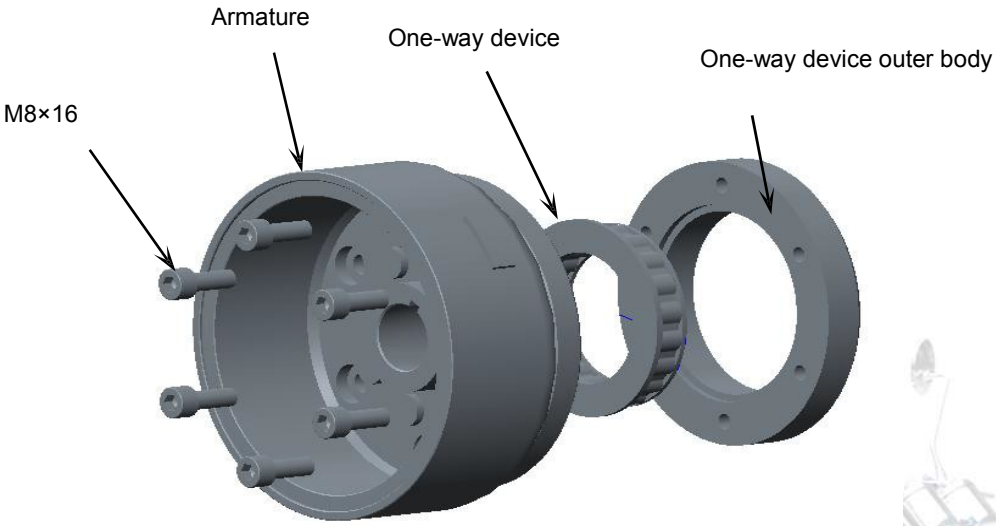

No	Procedure	Quantity	Remarks
	Removing order		**Installation is in the reverse order of removal**
1	Screw M8×16	**6**	Use thread retaining adhesive LOCTITE 648 while assembling, with the tightening torque being 25N.m
2	One-way device outer body	**1**	
3	One-way device	**1**	Be careful of the assembling direction
4	Armature	**1**	

Starting motor and starting

Transmission system

1) Remove the live wire and earth wire of the starting motor.

2) Remove the starting motor connecting bolt M6×25.

3) Push the motor towards the right and lift it, and then carefully take it out from the left basket.

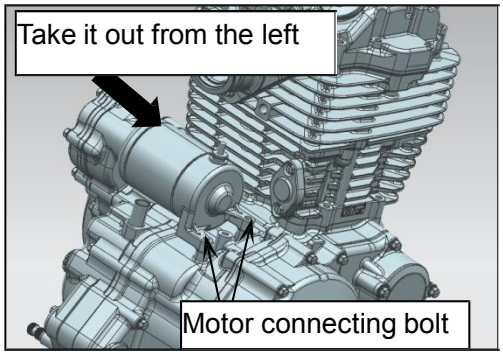

Installation is in the reverse order of removal

To mount the rotor assembly:

1) Mount the disk gear washer, coat the mixture of engine oil and molybdenum disulfide onto the left crank journal, and mount the disk gear and confirm the semicircular key.

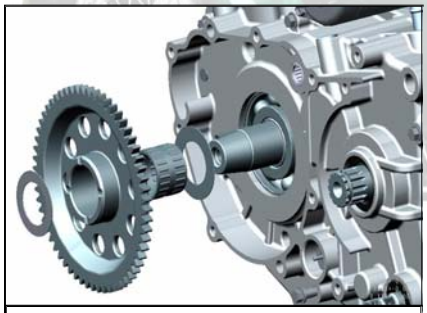

Apply the mixture of engine oil and molybdenum disulfide

2) Mount the rotor assembly

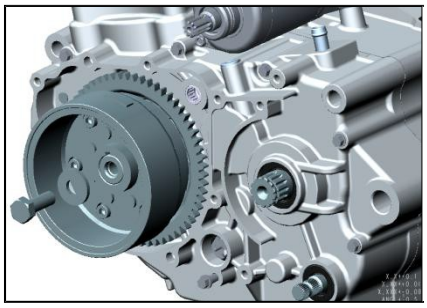

3) Mount the plain washer and apply thread retaining adhesive LOCTITE648 to the fastening nut M12; use the rotor fastening tool fasten the rotor, and screw up the nut M12 to the torque of 45N.m

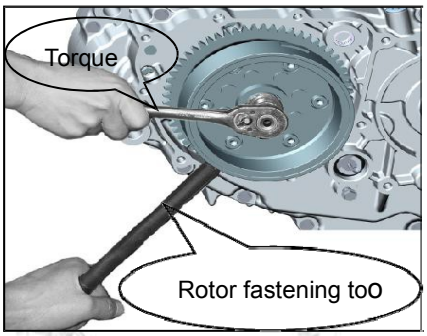

4) To install the Starting dual gear:

The Washer and the Starting dual gear is assembled into the left crankcase

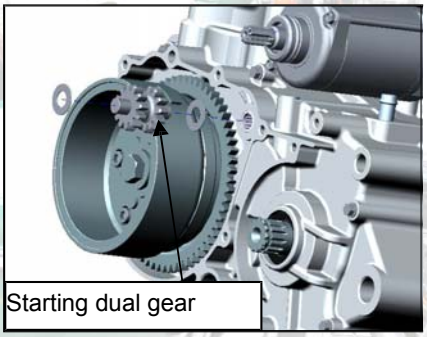

5) To install the left front cover:

(1)Clean the sealing paper gasket remaining on the left crankcase and left front cover, replace with new left front cover sealing paper gasket and confirm the location pin, starting idle gear, Starting dual gear, etc. are in correct position.

(2)Mount the left front cover,

(3)Mount the left front cover bolt

(4) Connect the magneto leads.

(5) Mount the left rear cover, gear shift pedal and engine protection plate.

(6) Put on the oil drain plug and refill engine lubricating oil.

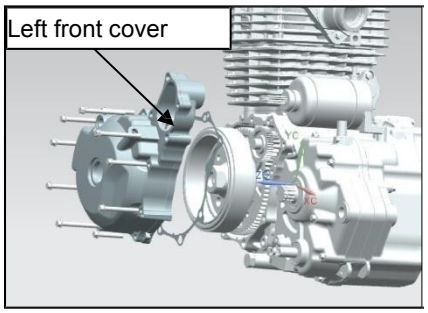

6) To install the Starting dual gear cove:

(1)Clean up the left front cover and parts, mount the starting idle gear, Starting dual gear, etc.

(2)The O-ring into the double gear cover , O In case of O-ring aging, prolonging or deforming, replace it.

(3)Mount the Starting dual gear cove,

(4)screw up to the torque of 8-12N.m

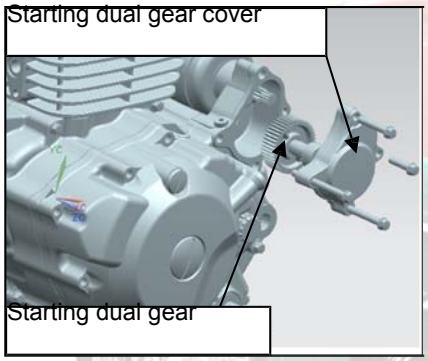

Notice:

Never let adhere to the left crank conical surface and rotor tapered surface.

The disk gear shall only be capable of rotating clockwise flexibly relative to the rotor.

Use the thread retaining adhesive LOCTITE 648 while assembling the pressure plate bolt.

Warning

Thread retaining adhesive LOCTITE243 must be applied to the rotor retaining nut M12 while assembling, with the tightening torque being 45N.m.

Check

1) Check the spline gear of output shaft of the starting motor for defect, squeezing, deforming, etc.

2) Check the idle gear and Starting dual gear for missing teeth, etc.

3) Check the idle gear shaft and Starting dual gear shaft for bending.

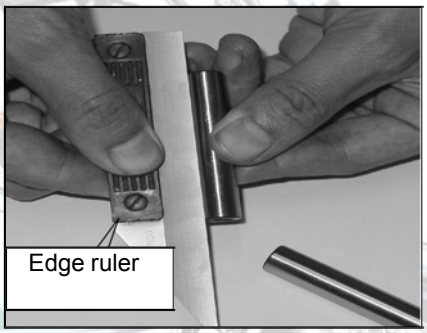

4) Check the rotating flexibility and unidirectivity of the disk gear (relative to clockwise rotor rotation).

5) Check the axial play of the disk gear, generally not less than 0.4mm.

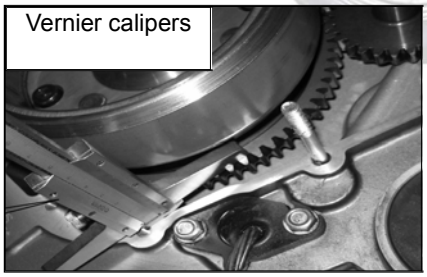

6) Measure the disk gear diameter, the maintenance

7) Measure the washer thickness, the maintenance limit: ≥

0.4mm

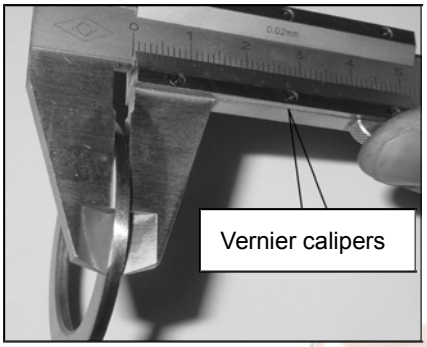

9. Crankcase, crankshaft and Shift mechanism

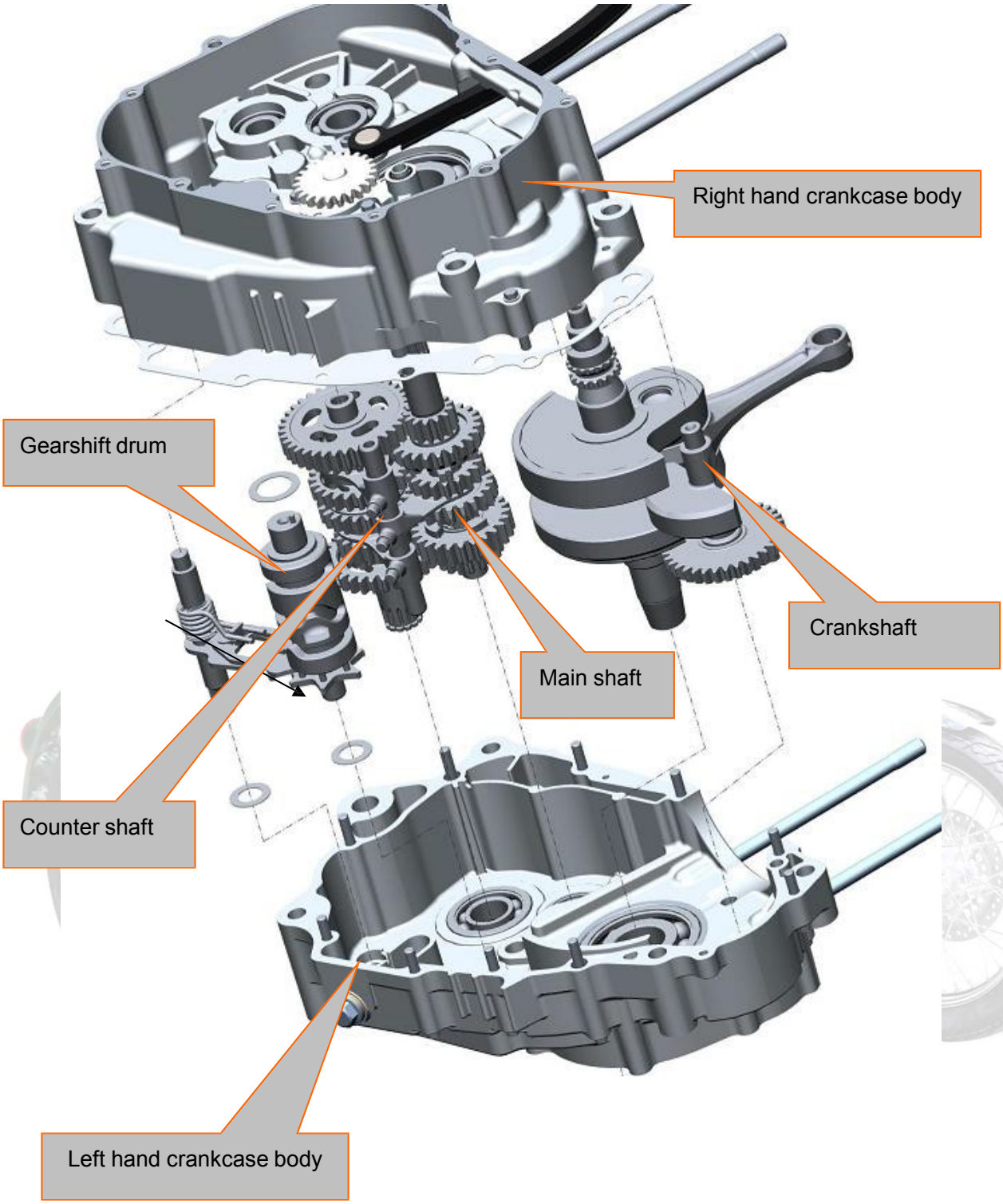

Crankcase, crankshaft and Shift mechanism

Maintenance notice	Crankshaft and balance shaft
Troubleshooting	Variable transmission system
Crankcase	

Maintenance notice

To carry out the maintenance stated herein, the engine must be removed from the frame.

To repair the crankshaft, balance shaft or variable transmission system, the left hand crankcase and the right hand crankcase must be separated, which is known as crankcase dissection. Before crankcase dissecting, the following parts and components of the engine shall be removed:

1) Right hand crankcase, clutch, gear shifter

2) Cylinder head cover, camshaft, cylinder head, cylinder and piston (See “Cylinder head, cylinder and piston”);

3) Left front cover, rotor assembly, electrical starting transmission system (See “Magneto and electrical starting system”);

4) Driving drive sprocket, shift switch.

Before assembling, clean all parts and components with cleaning agent and dry them with compressed air.

Technical specifications & maintenance benchmark

Item		Standard value	Maintenance limit value
Shift fork claw thickness	Gear shift fork	6.05 ~ 5.40	5.80
Crankshaft	Connecting rod small end bore diameter	Φ20.03 ~ Φ20.038	Φ20.063
	Disc planeness	0.028 ~ 0.042	0.06
	Connecting rod big end radial clearance	0.30 ~ 0.60	0.80
	Radial runout	0.03	0.10
	Left crank journal	Φ29.959 ~ Φ29.98	Φ29.87

Troubleshooting

- **Noise from engine**

1) Crankshaft bearing worn;
2) Connecting rod big end bearing worn;
3) Driving/driven shaft bearings worn;
4) Balance shaft supplementary tooth spring failure.

- **Driving/driven shaft gears engaged badly**

1) Shift fork bent or damaged;
2) Shift fork shaft bent;
3) Gearshift drum badly machined or bearing shifted;
4) Driving/driven shaft bearings shifted.

- **Gear shift trouble**

1) Shift fork bent or damaged;
2) Shift fork shaft bent;
3) Gearshift drum guiding slot worn or damaged;
4) Clutch improperly adjusted.
5) Locking plate bend or fray；
6) Five star plate assy broken
7) Pin broken or slip off

- **Gear shaft cannot return back**

1) Sping broken or slip off
2) Variable-speed shaft plate interfere crankcase or crankcase cover。

Crankcase

To remove the crankcase:

1) Remove the engine from the frame (engine oil fully drained) and put it on the assembly operating table.

2) Remove such parts and components as right hand crankcase cover, clutch, gear shifter, cylinder head cover, camshaft, cylinder head, cylinder, piston, left front cover, rotor assembly, electrical starting transmission system, driving drive sprocket, etc. (Refer to the related sections).

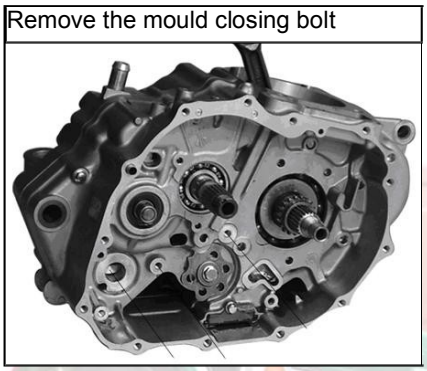

3) Use a Bakelite hammer or a nylon hammer to strike the left hand crankcase gently to separate it with the right hand crankcase.

4) Remove the driving/driven shaft, gearshift drum, shift fork, etc.

5) Remove the cranks-haft and balance shaft。

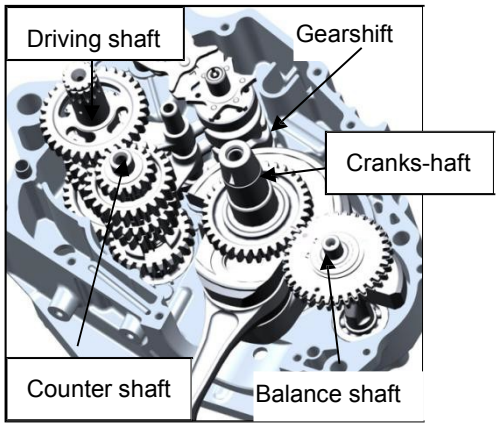

⚠**Notice**

Do not pry the left/right hand crankcase body by inserting such tools as screwdrivers into the mould closing face.

To mount the crankcase:

1) Place the right hand crankcase on the assembly operating table, and assemble the internal parts and components of the crankcase, including crankshaft, balance shaft, driving/driven shaft, gearshift drum, shift fork, etc

2) Clean up the left and right crankcase box surface, put the new crankcase paper pad, confirm the positioning pin.

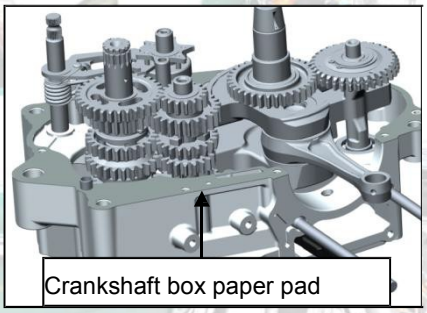

3) Use the counter shaft oil seal guide (S TOOL) to protect the counter shaft oil seal, use the gearshift drum oil seal guide (S TOOL) to protect the gearshift drum oil seal, and mount the left hand crankcase (closing).

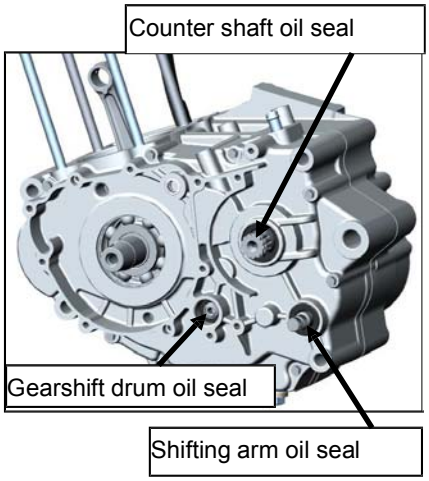

4) Mount the mould closing bolt and fasten it.

5) Mount other parts and components of engine, mainly include right hand crankcase cover, clutch, gear shifter, cylinder head cover, camshaft, cylinder head, cylinder, piston, left front cover, rotor assembly, electrical starting transmission system, driving drive sprocket, etc. (Refer to the related sections).

6) Mount the assembled engine onto the frame, and engine oil to complete the assembly of the complete vehicle.

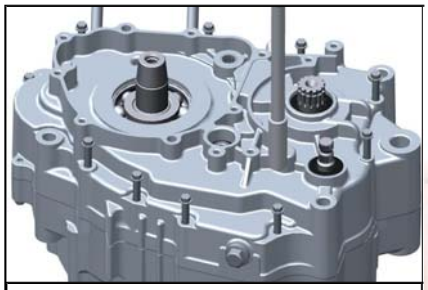

Mount the mould closing bolt

⚠**Notice:**

To close the crankcase, use your hand(s) to gently press it in place, or use a Bakelite hammer to strike it gently. Never strike it forcibly.

Removal and installation of crankcase

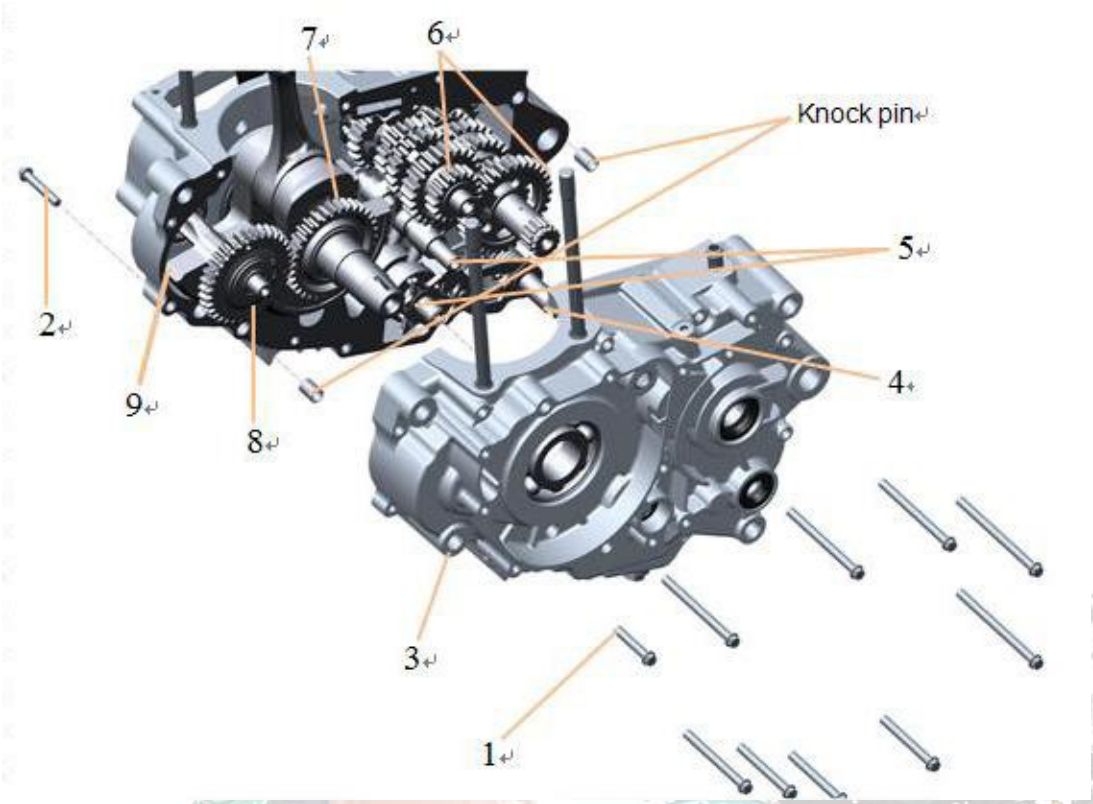

No.	Procedure	Quantity	Remarks
	Removing order		**Installation is in the reverse order of removal**
1	Mould closing bolt (big pan head)	12	
2	Mould closing bolt (small pan head)	1	
3	Left hand crankcase	1	Use the oil seal guide to protect the oil seal during removal and installation
4	Shift arm combination	1	
5	Gearshift drum, shift fork, etc.	1	
6	Driving/driven shaft	1	
7	Crankshaft	1	
8	Balance shaft	1	
9	Right hand crankcase	1	

Disassembly and assembly of left hand crankcase

Disassemble and assemble the left hand crankcase according to the following diagram.

Do not remove breather pipe joint, otherwise damage will be caused. Generally, do not remove the bearing; if it is removed, coat engine oil on surfaces of spare parts while pressing it in; mount it with SST and confirm the press-in depth of the bearing.

Assemble the driving shaft bearing with the with oil seal facing inwards. Disassembling the needle bearing may damage it; in case it is damaged, always change a new one. Replace oil seal with a new one after being removed.

⚠**Notice:**

Do not dent the sealing surface, and assemble the driving shaft bearing with the basket with oil seal facing inwards.

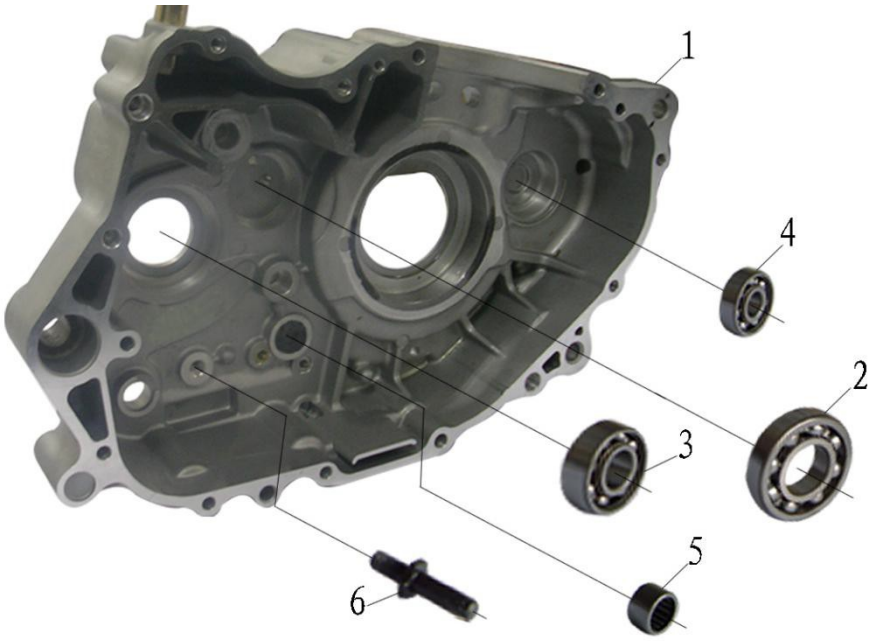

No.	Procedure	Quantity	Remarks
	Removing order		**Installation is in the reverse order of removal**
1	Left hand crankcase	**1**	Apply engine oil while assembling
2	Crankshaft bearing 6203	1	Apply engine oil while assembling
3	Driving shaft bearing 6006	1	Let the oil seal basket face inward and apply engine oil while assembling
4	Balance shaft bearing 6301/13/C3	1	Apply engine oil while assembling
5	Crankshaft paper gasket -HK121610	1	Replace it with a new one while assembling
6	Arm stopper bolt M8x41	1	Do not remove it

Disassembly and assembly of right hand crankcase

Generally, do not remove the bearing; if it is removed, coat engine oil on surfaces of spare parts while pressing it in; mount it with SST and confirm the press-in depth of the bearing. Assemble the driven shaft bearing with the with oil seal facing inwards.

Disassembling the needle bearing may damage it; in case it is damaged, always change a new one.

Replace washer with new ones after being removed.

Apply the thread retaining adhesive LOCTITE 648 while assembling the stud bolt.

⚠**Notice:**

Do not the sealing surface, and assemble the driven shaft bearing with the basket with oil seal facing inwards.

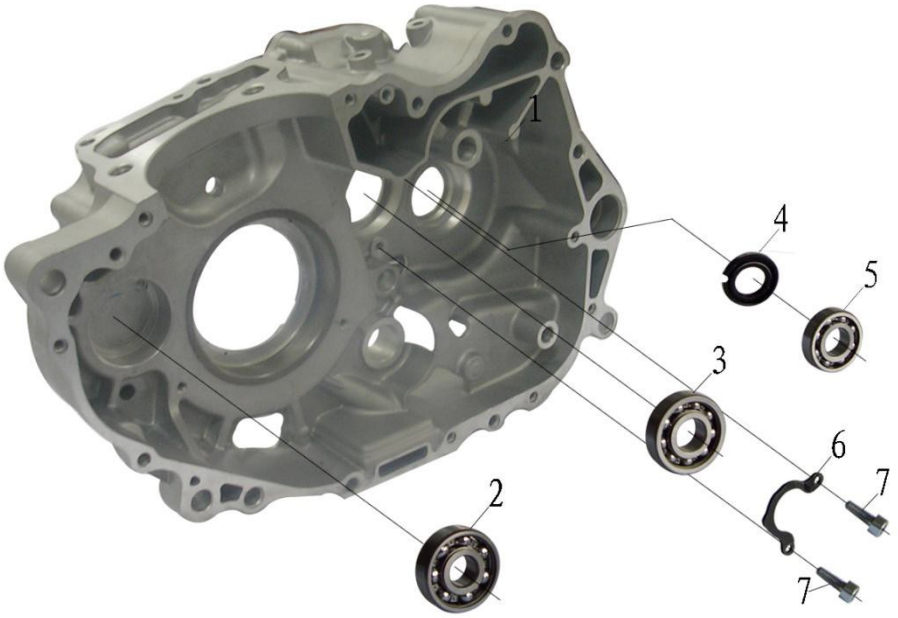

No.	Procedure	Quantity	Remarks
	Removing order		**Installation is in the reverse order of removal**
1	Right hand crankcase	1	
2	Balance shaft bearing 6302	1	Apply engine oil while assembling
3	Driving shaft bearing 62/22/C3	1	Let the oil seal basket face inward and apply engine oil while assembling
4	Gear shift shaft oil seal 18x34x5	1	Apply engine oil while assembling
5	Driven shaft bearing 60/18RLYAB	1	Let the oil seal basket face inward and apply engine oil while assembling
6	Driving shaft bearing pressure plate	1	
7	Stud bolt M6×16	2	Use thread retaining adhesive LOCTITE 648 while assembling

Crankshaft and balance shaft

To remove the crankshaft and balance shaft:

1) Remove the (left hand) crankcase (See “Removal of left hand crankcase").
2) Remove the balance shaft.
3) Remove the crankshaft.

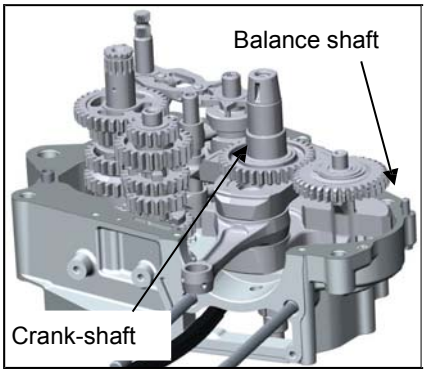

⚠**Notice:**

While removing, you may strike the balance shaft and crankshaft gently; however, always avoid damaging them.

To mount the crankshaft and balance shaft:

1) Place the right hand crankcase assembled with variable transmission system (driving/driven shaft, etc.) on the assembly operating table, and use a high power electric drier to heat the right crankcase body crankshaft bearing until the temperature at the inner circle of the bearing reaches 106℃, and then assemble the crankshaft.

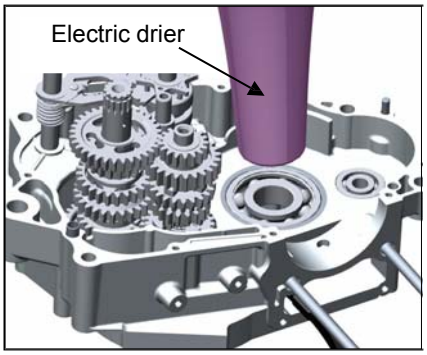

2) Use a high power electric drier to heat the right crankcase body balance shaft bearing until the temperature at the inner circle of the bearing reaches 106℃, and then assemble the balance shaft. Remember to align the markers on the driving and driven gears.
3) Mount the left hand crankcase (See “Installation of crankcase").

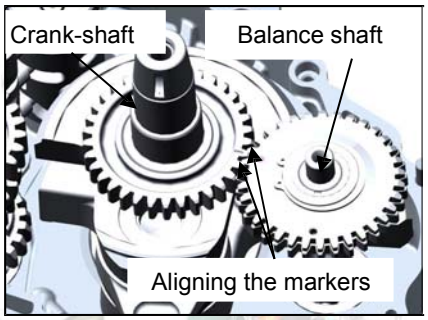

⚠**Notice:**

Only assemble when the temperature reaches 106℃, otherwise it can’t be assembled. Never savagely strike it! The markers on the driving and driven gears must be aligned.

Removal and installation of crankshaft and balance shaft

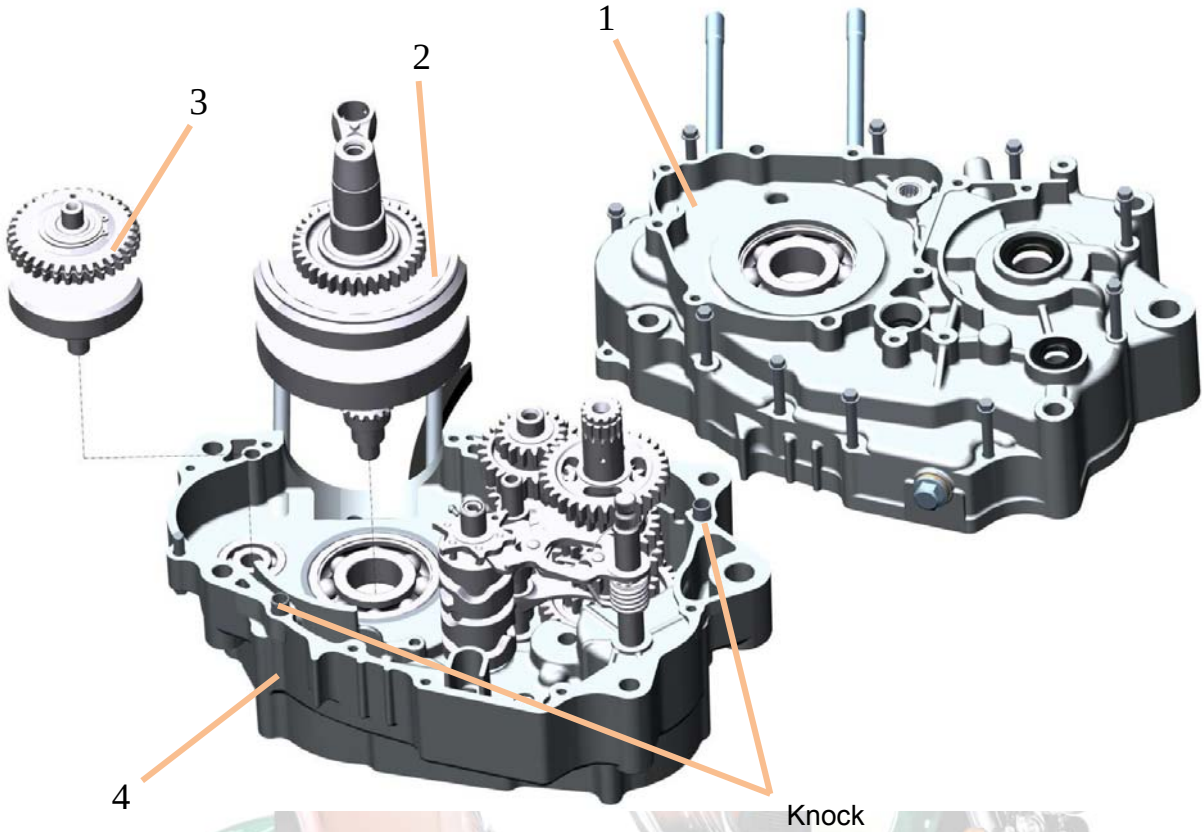

No.	Procedure	Quantity	Remarks
	Removing order		**Installation is in the reverse order of removal**
1	Left hand crankcase	1	
2	Crankshaft	1	
3	Balance shaft	1	
4	Right hand crankcase	1	

Disassembly and assembly of crankshaft and balance shaft

Do not further disassemble the crank shaft, otherwise the spar parts may be damaged.

Disassemble and assemble the balance shaft according to the following diagram. ⚠

Notice:

Always align the markers while assembling the balance shaft.

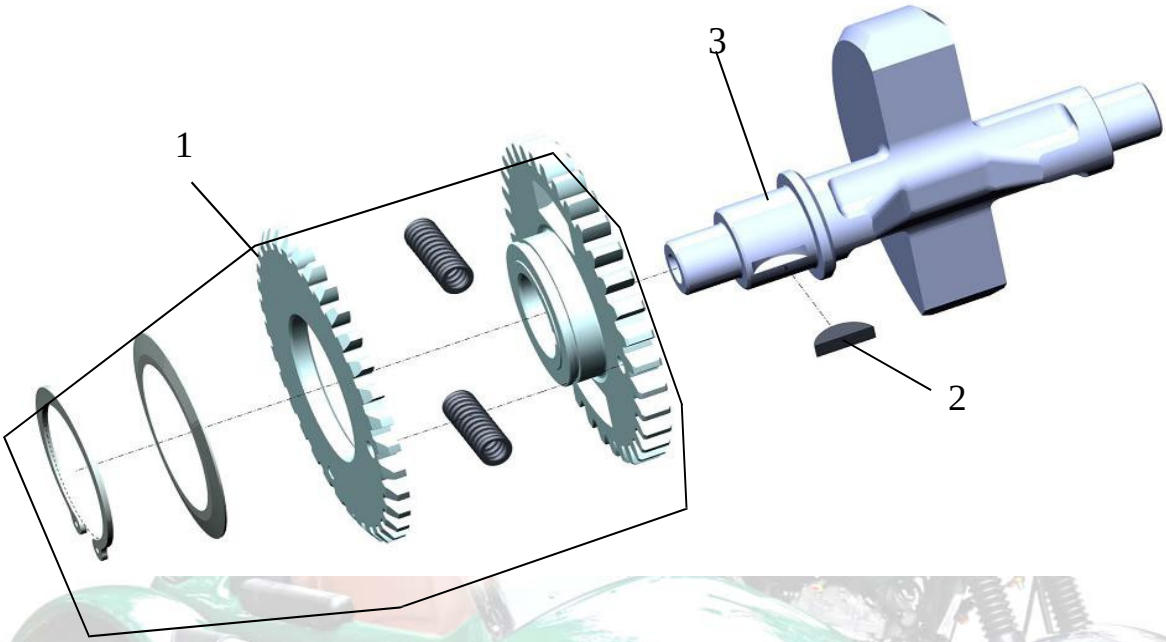

No.	Procedure	Quantity	Remarks
	Sequence of disassembling		**Assembling is in the reverse order of disassembling.**
1	Balance shaft driven gear assembly	1	Apply engine oil while assembling
2	Woodruff key	1	
3	Balance shaft	1	Apply engine oil while assembling

Crankshaft and balance shaft inspection

1) Check whether the crankshaft journals are abnormally worn, whether the connecting rod can rotate flexibly and whether there is significant noise while rotating.

Measure the connecting rod small end bore diameter.

Maintenance limit: ≤Φ20.063mm.

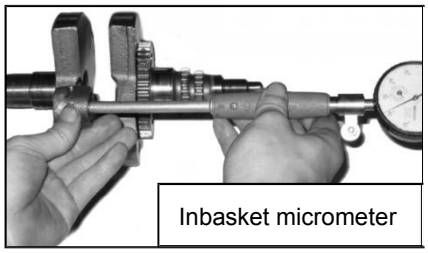

2) Measure the crankshaft radial run out.

Maintenance limit: ≤0.10mm.

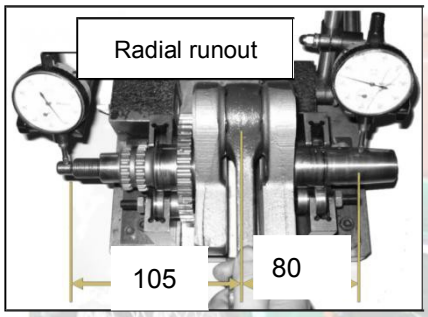

3) Measure the connecting rod big end radial clearance.

Maintenance limit: ≤0.06mm.

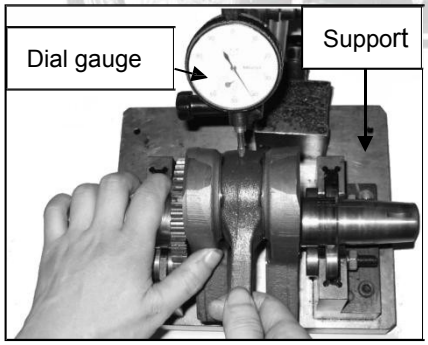

4) Measure the connecting rod large end basket clearance, the maintenance limit: ≤0.80mm.

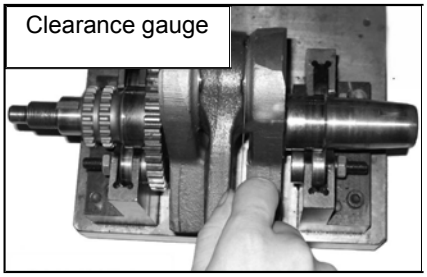

5) Measure the left hand crank journal.

Maintenance limit: ≥Φ29.87mm.

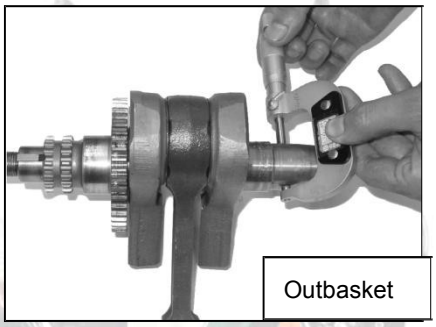

6) Check whether the balance shaft supplementary tooth spring fails and whether the balance shaft supplementary tooth can return.

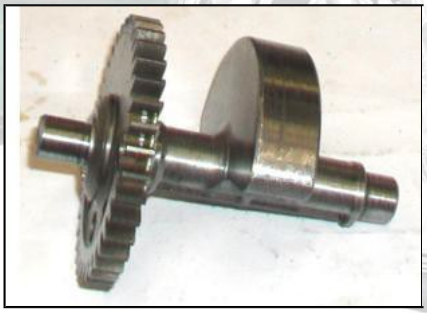

Variable transmission system

To remove the variable transmission system:

1) Remove the (left hand) crankcase (See “Removal of left hand crankcase").
2) Remove the shift fork shaft.
3) Remove the gearshift drum.
4) Remove the shift fork.
5) Remove the driving/driven shaft

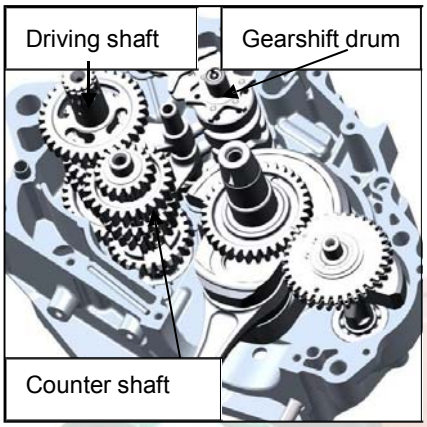

To mount the variable transmission system:

1) Place the right hand crankcase assembled with crankshaft and balance shaft on the assembly operating table, and the driving/driven shaft and assemble the them together.

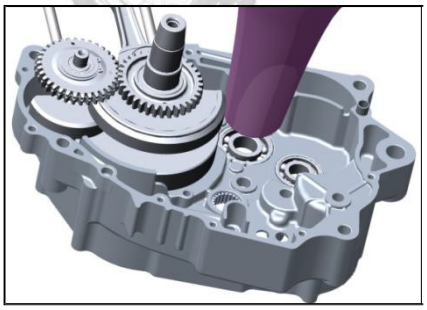

2) Assemble the shift fork with
3) Mount the gearshift drum.。
4) Change the O-shaped sealing ring, mount the shift fork, and check whether the driving/driven shaft can rotate freely
5) Mount the shift arm

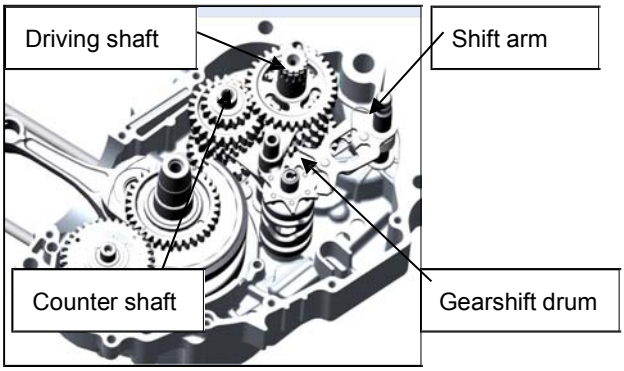

6) Replace it with a new paper pad assembly one while assembling， mount the left hand crankcase(See “Installation of crankcase")

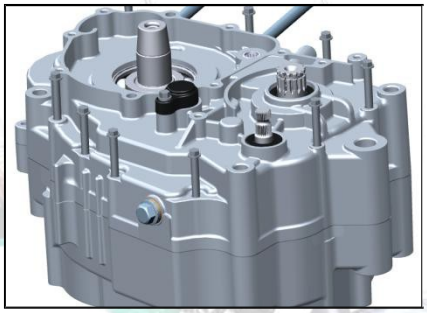

⚠**Notice:**

Only assemble when the temperature reaches 106℃, otherwise it can’t be assembled. Never forcefully strike it!

Removal and installation of driving shaft and driven shaft and gearshift drum and shifting shaft

Attention: the washer, retainer, etc. must be assembled in place at the correct positions, the spare parts 8 apply lubricating oil. while assembling

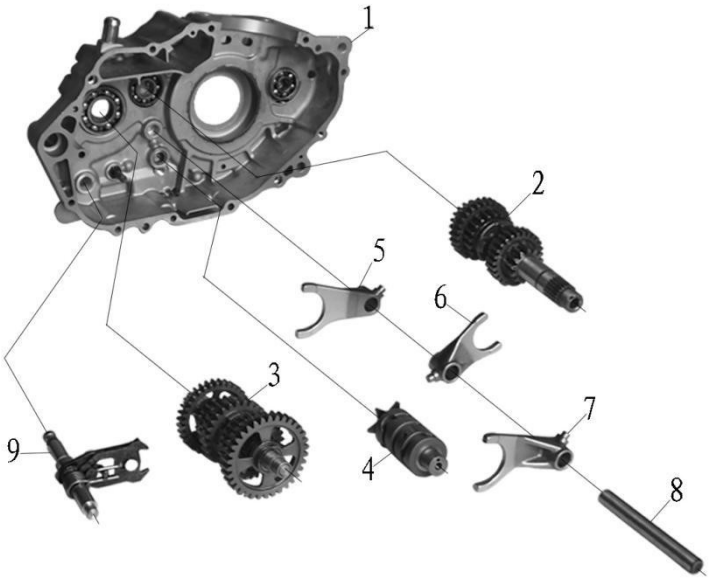

No.	Procedure	Quantity	Remarks
	Sequence of disassembling		**Assembling is in the reverse order of disassembling.**
1	Left hand crankcase	**1**	
2	driving shaft	**1**	Apply engine oil while assembling
3	driven shaft	**1**	Apply engine oil while assembling
4	gearshift drum	**1**	Apply engine oil while assembling
5	Shift fork(left)	**1**	Apply engine oil while assembling
6	Shift fork(middle)	**1**	Apply engine oil while assembling
7	Shift fork(right)	**1**	Replace it with a new one while assembling
8	Shift fork shaft	**1**	Apply engine oil while assembling
9	gearshift drum	**1**	

Check

Check the driving/driven shaft gears for serious abrasion and pit corrosion; check whether the shift fork is bent and whether the gearshift drum guiding slot is damaged.

Driving/driven shaft inspection

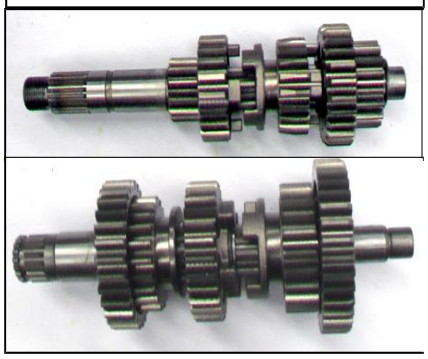

Shift fork shaft inspection

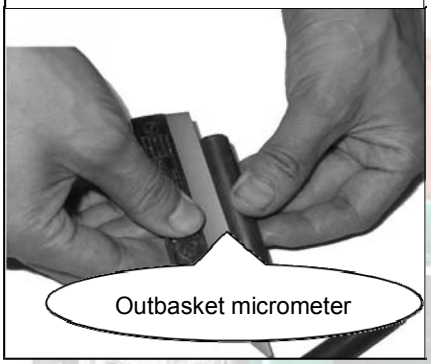

Gearshift drum inspection

Measure the shift fork claw thickness.

Maintenance limit: ≥5.80mm.

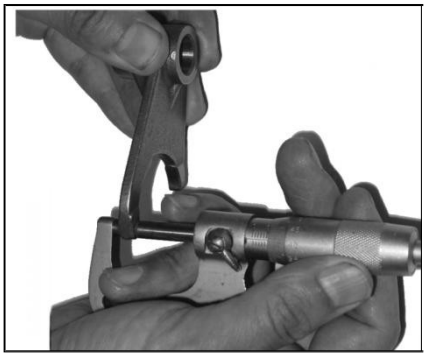

Shift mechanism

To remove the shift mechanism

1) Removal of left hand crankcase cover (See “Removal of left hand crankcase cover ").

2) Remove the unloaded rotor assembly, left crankcase Assembly (See “Removal of left hand crankcase cover ").

Mount the left crankcase assembly

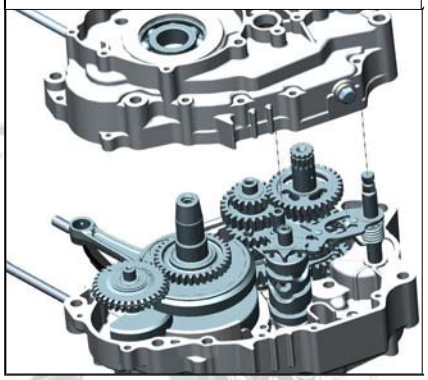

3) If only remove unloading gear arm, is not required to remove unloading gear drum assembly can be directly drawn outward shift arm combination.

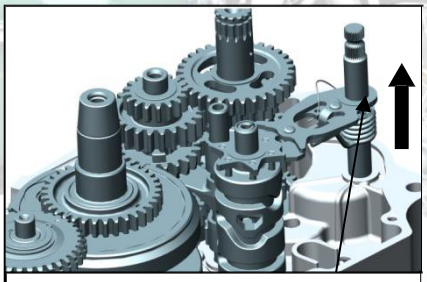

Pull out the shift arm combination

To mount the shift mechanism

1) Mount the gearshift arm combination

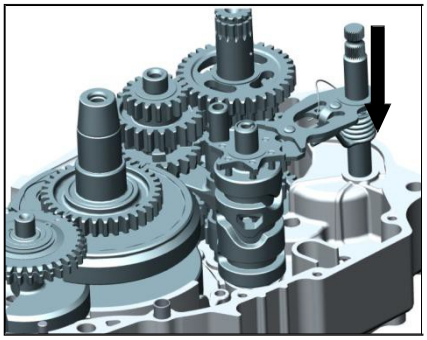

2) Mount the left crankcase body combination（Use oil seal guide to protect oil seal）

3) Mount the rotor assembly (See “Mount of left hand crankcase cover ").

4) Mount the left hand crankcase cover (See “Mount of right crankcase cover ").

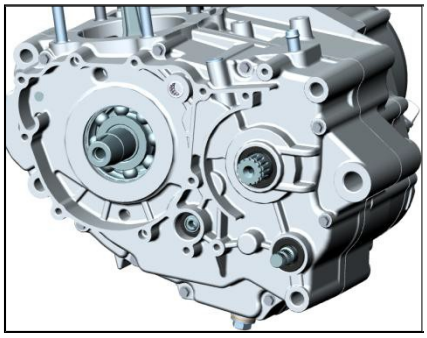

Warning

Thread retaining adhesive LOCTITE243 must be applied to the rotor retaining nut M12 while assembling, with the tightening torque being 45N.m

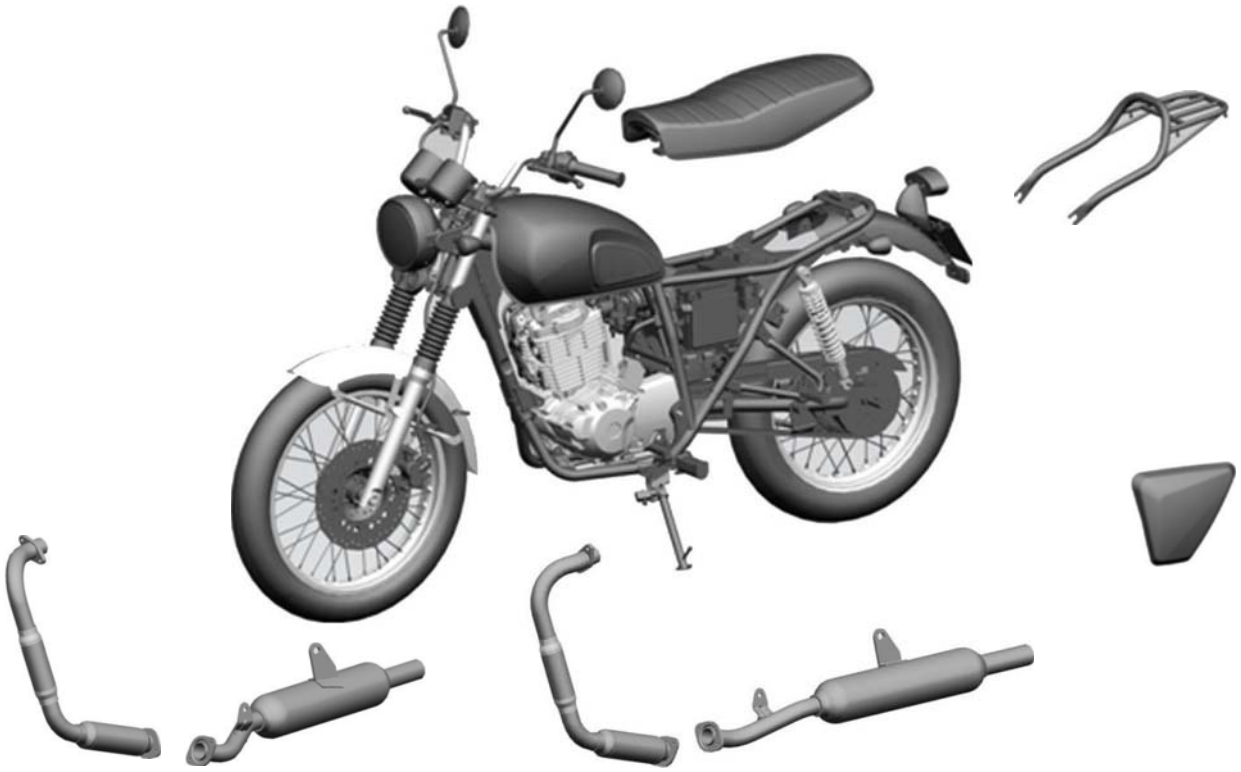

Frame and exhaust system

Maintenance notice	Removal and installation of rear mudguard
Troubleshooting	Removal / installation of exhaust muffler
Coverings, headlamp and meter	Rear position lamp assembly

Maintenance notice

To carry out the maintenance stated herein, take special care of the scratches and damages to the coverings, meter and light fittings.

Removing or repairing the parts and components before the exhaust system is cooled down may cause serious burn injury.

This section mainly includes the removal and installation of the complete vehicle's coverings, rear mudguard, exhaust muffler, radiator and lamps.

Troubleshooting

- Excessive exhaust noise

The exhaust system is damaged;

Air leakage;

- Abnormal operation

Exhaust system deformed;

Air leakage;

Muffler clogged.

Maintenance of Frame

Component description	Damage form	Trouble symptom of component	Trouble symptom of motorcycle	Repair method
Frame	The frame is deformed or broken.	The frame is deformed or broken.	Running off-tracking	Calibrate or replace frame
Main stand	Deformation or fractured	Deformation or fractured	Effect of parking	Replace the main stand
	Return spring is fractured	Main stand impossible to return	Effect of parking	Replace the return spring
Covering parts	Broken	Broken	Effect the appearance	Replace or repair

				Covering parts
Fender	Damaged	Broken	Effects of fender effect	Replace the fender
Seat	Broken	Broken	Decrease of the comfortable	Replace the seat
Footrest	Broken and deformation	Broken and deformation		Replace the footrest

Maintenance of Exhaust Muffler

Component	Damage form	Trouble symptom of	Trouble symptom of	Repair method

Maintenance of Frame and Accessories

- Overall structure of frame is shown in fig. check welding part whether is come off and frame is distorted.

- Overall structure of basket stand is shown in fig and check it whether is distorted.

- Dismantle front and rear footrest bolt to check welding part of footrest whether is broken.

- Check front footrest whether is broken.

- Check rear footrest whether is broken.

- Check front fender whether is damaged.

- Check rear fender whether is damaged.

- Check left and right basket cover whether are damaged or mouting plug whether is broken.

- Check seat rubber whether is cracked or worn.

Basket cover and seat

- Remove the two nut, remove the seat.

- Remove the left/right basket cover assembly.

  Handle it carefully in order to prevent scratching the exterior decorating surface.

- Remove the 2 connecting bolts in the headlamp bracket.

- Remove the 2 connecting screw in the front face of the motorcycle.

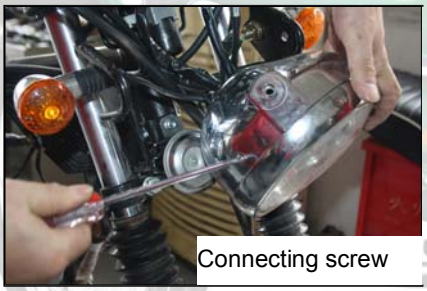

- Pull off the headlamp patch plug to remove the headlamp.

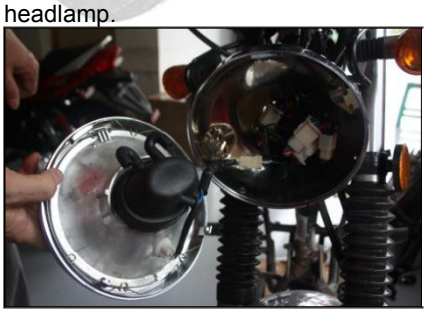

- Pull off the left/ right turn lamp connecting wire from the headlamp bracket.

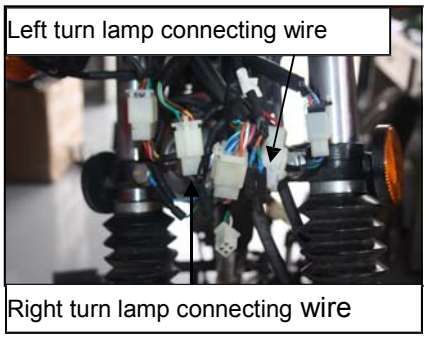

- Remove the meter assembly (total of 2 connecting bolts).

To mount the coverings, headlamp and meter:

The installation of the coverings, headlamp and meter is in the reverse order of removal. During installation, do not scratch the coverings or damage the bulb.

⚠ **Notice**

During removal and installation, do not scratch the outer surface of coverings or break the buckle mortise.

Illumination signal system

Headlamp dimming

Before driving, check the brightness, direction, etc. of the headlamp.

The adjustment can be made to the headlamp in the left / right and vertical directions.

Loose the screw to disassemble the headlight.

Rotating , directly unplugging

Rotating and disassemble the bulb.

Install the new bulb in reverse order

Headlamp bulb specifications:12V55W/60W

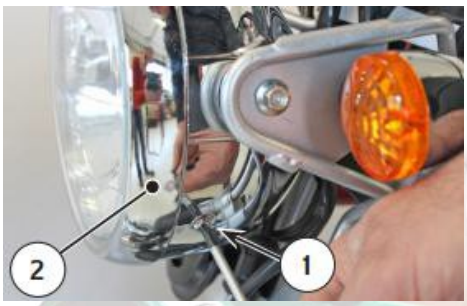

Position lamp

- ✧ Unplugging the basketlight seat
- ✧ Unplugging the basketlight bulb

Position lamp bulb specifications: 12V5W

Combined rear position lamp

- ✧ - Undo the two screws (1) and remove the lens (2).
- ✧ - Remove the bulb (3) by pushing and turning it anticlockwise.
- ✧ - Fit a new bulb in the bulb holder, pushing and turning it clockwise to lock it into place.
- ✧ - Refit the lens (2) and tighten the screws (1) without forcing.

Turn signal light

✧ Loosen the screws（1）, remove the lamp lampshade（2）

✧ Lightly press bulb（3）, rotate in counter-clockwise.

✧ Install new bulb in opposite order as below.

✧ Turn lamp bulb specifications:12V10W

Dismantle/Mantle and check of air exhaust system

To remove the exhaust muffler:

- Park the motorcycle on the plane ground with main stand; pull off the oxygen sensor patch plug.

- Dismantle the suspension bolt on the muffler, check whether it is sliding.

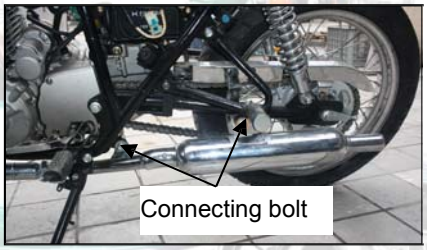

- Dismantle muffler connecting nut, check whether the nut and bolt is sliding.
- Dismantle the muffler, check whether the washer is damaged.

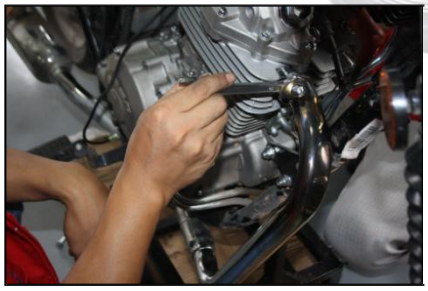

To mount the exhaust muffler:

Installation is in the reverse order of removal.

The muffler seal gasket at the engine's exhaust port shall be replaced with a new one.

While mounting, apply sealants at the joining part of the exhaust pipe and the muffler, and fasten the bolts of the exhaust port and muffler support after the joint anchor ear bolt is screwed up, otherwise air leakage may occur.

⚠ **Notice:**

Proceed with the operation after making sure the muffler is completely cooled down, otherwise burn injury may occur.

Maintenance of Control System

Disassemble, assemble and check control

1) Dismantle right handle bar switch and check throttle handle whether is damaged then fill lubrication oil

2) Take out throttle cable and check it whether is worn and fill lubrication oil.

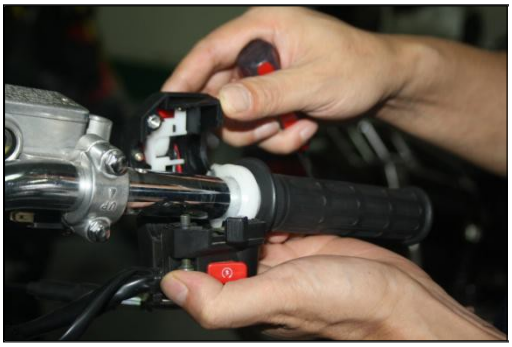

3) Check front brake stroke whether is over big.

4) fr t r il i t r l il.

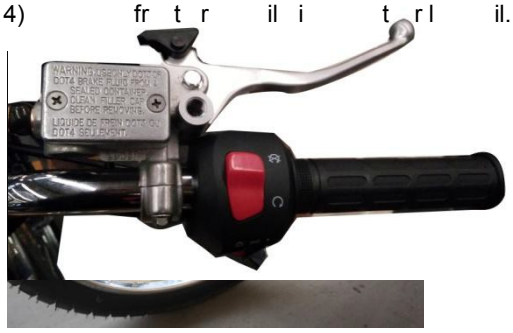

5) Dismantle clutch cable.

6) Check cable whether is flexible.

7) Adjust clutch and check clutch whether it declutch.

8) Adjust rear brake and check it whether it return or stroke is over big.

9) Adjust clutch handle free stroke to10mm-20mm.

Adjust front brake handle to10mm-20mm.

Adjust rear brake free stroke to18mm-25mm

11. Front wheel, front suspension device and steering stem

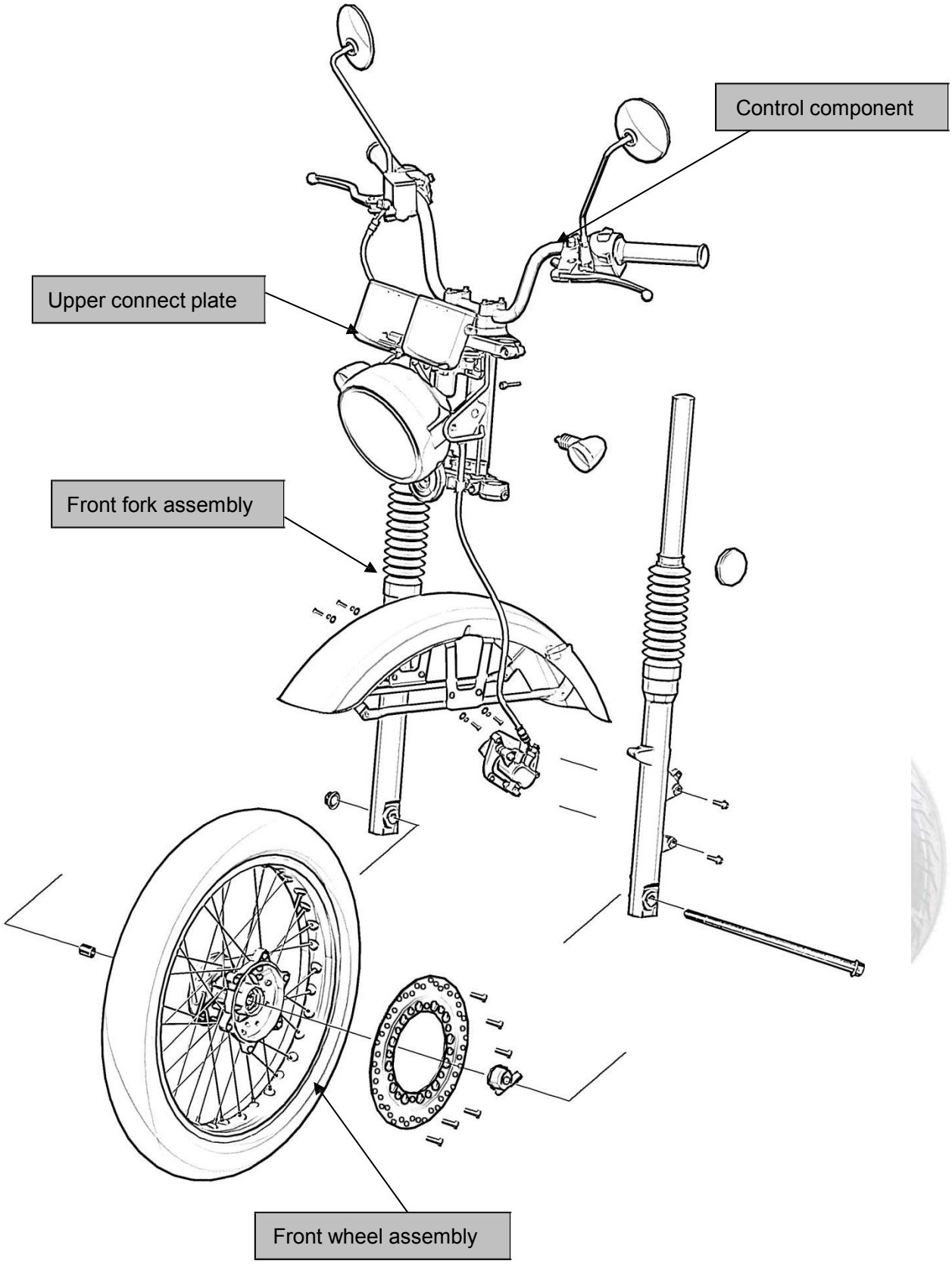

Front wheel, front suspension device and steering stem

Maintenance notice	Front suspension device
Troubleshooting	Front brake
Control subassembly	Steering stem
Front wheel	

Maintenance notice

This section introduces the removal, installation and maintenance of the front wheel, front suspension device (front fork), front brake and steering stem. While repairing the front wheel, reliably support the motorcycle from under the engine with a jack or other supports to lift the front wheel above the ground.

Key torque values

Front wheel spindle	**50N·m -60N·m**
Steering handle set bolt	**20 ~ 30N.m**
Front fork vertical pipe cap nut	**50 ~ 60N.m**
Upper / lower connection plate set bolt	**8 ~ 12N.m**
Brake disc fastening nut	**20 ~ 30N.m**

Troubleshooting

- Steering unstable

  1) Vertical pipe bearing failure

  2) Tire pressure insufficient

  3) Tire damaged

  4) Wheel bush damaged

- Driving directions to the basket or not to walk in a straight line

  1) Left / Right damper adjustment uneven

  2) Front fork bent

  3) Front wheel spindle bent or wheel mounted improperly

  4) Wheel bearing damaged

  5) Wheel bush damaged

- Front wheel run out

  1) Rim bent or deformed

  2) Wheel bearing worn

  3) Wheel spoke deformed or slacked

  4) Front wheel spindle slacked

  5) Tire damaged

- Wheel hard to rotate

  1) Wheel bearing or bush damaged

  2) Adjusting nut over-fastened

  3) Tire pressure insufficient

  4) Shift fork bent or damaged.

- Insufficient suspension device rigidity

  1) Insufficient front fork spring

  2) Insufficient hydraulic oil refilled in the front fork

- Poor brake performance

  1) The brake is not adjusted as per regulations

  2) Brake shoe worn

  3) Brake shoe has water or oil stain

Maintenance of Control system

Component description	Damage form	Trouble symptom of component	Trouble symptom of motorcycle	Repair method
Steering handle	The steering handle is deformed	The steering handle is bent and deformed.	Off-tracking in running.	Correct or replace steering post
Clutch handle	Over small of the free stroke		Clutch is slipping	Readjust the free stoke
	Over big of the free stroke		The clutch is not fully disconnected	Readjust the free stoke
Clutch control steel cable	The steel cable is ineffective in cable casing.	The clutch handle is impossible to control or return to the position with difficulties	Clutch slipping or is not fully disconnected	Clean、lubricate or replace control steel cable
	The steel cable		The clutch is slipping or not fully disconnected	Replace control steel cable
Rear brake pedal	The free stroke is over small.		The clutch is not fully disconnected.	Readjust the free stoke
	The free stoke is over big.		Disoperation of rear brake	Readjust the free stoke

For the damage form, fault symptom and repair method of front wheel

Component description	Damage form	Trouble symptom of component	Trouble symptom of motorcycle	Repair method
Front wheel	Front wheel rim is deformed	Front wheel rim is deformed.	Off racking in running. steering handle vibrates of shakes in running	Replace front hub
	The hub bearing hole is over worn	The bearing block hole has a loose match with the bearing.	Off racking in running. steering handle vibrates of shakes in running	Replace front rim
	Bearing is over worn or damaged.	The axial and radial gaps of bearing inner and outer rings are too big or is insufficient rotation.	Off racking in running. steering handle vibrates of shakes in running	Replace front bearing
Front tire	The tire is pricked or broken	Front tire has very low pressure	Inflexible of direction handle, insufficient engine output	Repair or replace tire

	The tire is over worn(the tire vein depth is less than 2mm)		It is possible to slip and has a poor slip proof function	Replace outer tire
Speedometer gear box	Gear is damaged.		The indicator of the speedometer fails to move	Replace speedometer gear box
	The gear drive ring is damaged.			

Maintenance of Front Shock Absorber

Component description	Damage form	Trouble symptom of component	Trouble symptom of motorcycle	Repair method
Front shock absorber spring	The elastic force is Insufficient or broken	The elastic force of shock absorber is Insufficient or broken	Front shock absorber is over Soft, abnormal sound comes out in case of front absorber working	Replace front shock absorber spring
Front shock strut	Bending and deformation	Front shock strut is bent and deformed	Off-track in running	Correct or replace front shock strut
	Working stroke surface is damaged or scratched	Leakage from oil seal	Leakage at front shock cylinder	Replace front shock strut
	Working stroke surface Cr coating partial is worn out to expose the substrate	Leakage from oil seal	Leakage at front shock cylinder	Replace front shock strut
Front shock cylinder	Broken deformed and damaged	Leakage at front shock cylinder	Leakage at front shock cylinder	Replace front shock cylinder
Piston rod	Over worn or damaged		Over soft at front shock cylinder	Replace piston rod
	Piston ring is over worn or damaged		Over soft at front shock cylinder	Replace piston ring
Oil sealing	Cut edge is over Worn or damaged or aged	Leakage from oil seal	Leakage at front shock absorber	Replace oil seal
Shock oil	Insufficient oil amount or too little	Insufficient shock oil or too little	Over soft of front shock absorber	Fill shock oil as per the specified stipulate

Maintenance of Steering Post

Component description	Damage form	Trouble symptom of component	Trouble symptom of motorcycle	Repair method
Steel ball socket	Over tight of steering stem screw	Too small gap between steel ball and steel ball steering ring	Steering handle is ineffective.	Adjust the steering post screw by tighten wrench till the steering post moves left and right flexibly and no axial shifting between steering post and frame stand pipe
	Over worn, pockmark, indentation, crack and damage of steel ball steering ring ball track		Ineffective steering handle or handle shakes or vibrates during running	Replace complete steel ball steering ring
Steel ball	The steel ball is worn, deformed and damaged.		Ineffective handle steering or handle shakes or vibrates during running	Replace all steel balls
Steering stem	The steering stem is deformed	The steering stem is deformed.	The steering stem is deformed.	Replace steering stem

For the damage form, fault symptom and repair method of front brake

Item	Damage form	Trouble symptom of component	Trouble symptom of motorcycle	Repair method
Front brake main pump assembly	brake 1iquid is insufficient	brake liquid is insufficient	brake lose effect	fill DOT4 to upper limit mark
	dirty brake liquid		brake lose effect	Replace the brake fluid
	surface of wall is damaged		brake lose effect	
	wall is over worn		brake lose effect	replace main pump
	oil case is cracked	oil leakage	brake lose effect	replace main pump
	piston surface is cracked		brake lose effect	replace main pump piston
	piston is damaged		brake lose effect	replace main pump piston
Front brake caliper	air entry into oil pipe		brake lose effect	exhaust front brake oil way
	oil pipe is broken	oil leakage from oil pipe	brake lose effect	replace oil pipe
	front brake oil pipe is	oil pipe is clogged	brake lose effect	clean or replace oil pipe

	clogged			
	wall is broken or cocked		brake lose effect	replace front brake caliper
	wall is over worn		brake lose effect	replace front brake caliper
	front brake caliper is broken	oil leakage from front brake caliper	lose effect	replace front break caliper
	seal ring is broken or worn	oil leakage	lose effect	replace front break caliper
	friction plate is over worn		lose effect	replace friction plate completely
	surface of piston is damaged or worn		abnormal sound or lose effect	replace brake caliper piston
	guide pin is clipped		front break lose effect or spring cannot be returned	clean or lubricate guide pin
Front brake disc	over worn(1ess than limit value3mm)		front brake lose effect	replace front brake disc
	distorted		abnormal sound or lose effect	replace front brake disc

Control subassembly

1、Remove the left/right balance weight.

2、Remove the right handle and right combination switch

- Pull off the brake switch leads

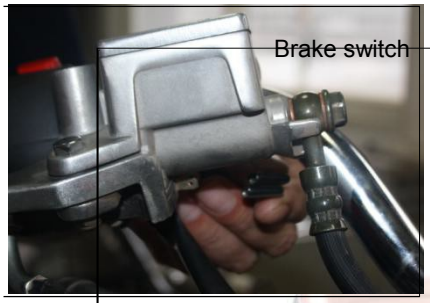

- Remove the upper/lower body of the right combination

- Remove the throttle control line

- Remove the right combination switch

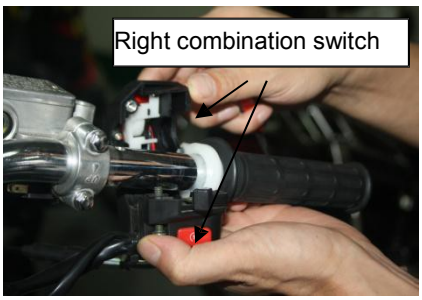

- Remove the right brake cylinder body.

- Remove the clutch control line and disassemble the connection of the clutch switch leads and the main cable.

- Remove the left combination switch.

- Loosen the retaining bolt and remove the clutch handle holder.

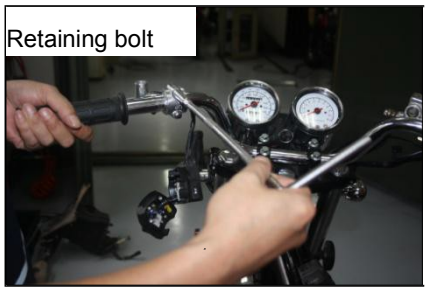

- Remove the clip and take out the grip tube

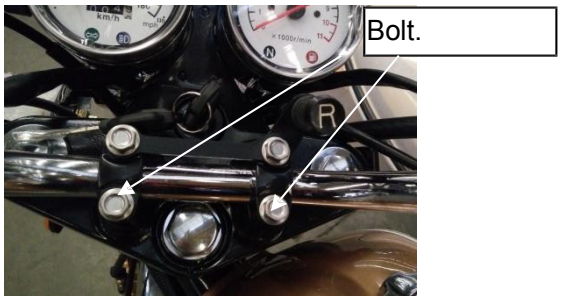

To install the control subassembly

1) Installation is in the reverse order of removal. While installing the brake cylinder body, make sure the cylinder is in the same height as the original mounting position to prevent air from entering the main fuel cylinder, thus influencing the braking performance. Do not twist the braking hose.
2) While installing, the clutch handle holder and the front brake cylinder body notch shall be aligned with the mark point of the grip tube, and the pins of left/right combination switch shall be blocked into the pin holes of the grip tube.
3) Steering column opening and a handlebar tube positioning point alignment,, and fasten the bolt at the connection board, and then the bolt at direction of the tube, up to the torque of 20-30N.m.
4) Do not mount the throttle cable in the opposite direction of the feeder on the right handle, otherwise the handle may rotate incorrectly while refueling.
5) Upon installation, adjust the throttle control line. Upon installation, check whether the cable and wiring is in accordance with the wiring diagram.

Maintenance of wheel

Support the motorcycle with a jack to lift the front wheel above the ground.

Dismantle nut of front wheel axle and check it whether is distored.

Dismantle front wheel and take off front wheel axle bush

Take out oil seal to check edge whether is worn or broken.

Take out the front wheel. Lift the front fork as high as possible while taking out the front wheel, to avoid damaging the front mudguard.

To mount of the front wheel

While installing, fasten the front wheel spindle nut to the required torque of 50-60N.m

Warning

The front wheel spindle must be firmly screwed up to the required torque of 50-60N.m.

Disassembly and assembly of front wheel

Disassemble and assemble the front wheel according to the following diagam.

After the bearing is removed, replace with a new bearing along

with dust seal.

Take out rear wheel and check there are parts damaged and check width, pressure of tire tread.

Check odometer teeth whether is worn or damaged and fill grease.

While assembling the brake disc, apply small amount of thread retaining adhesive LOCTITE243 on the threads of the screw, with tightening torque being 20-30N.m.

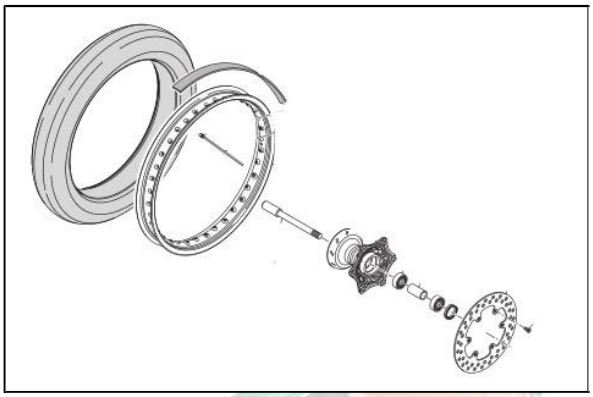

Warning

The brake disc retaining screw must be coated with thread retaining adhesive, with the tightening torque being 20-30N.m. Otherwise, it may cause a personal safety accident.

Front wheel spindle inspection

Dismantle front wheel axle nut and take out rear wheel axle to check it whether is distored.

Place the front wheel spindle on the V-holder, and measure the deflection of the wheel spindle with a dial gauge; if the reading is no less than 0.2mm, replace the front wheel spindle.

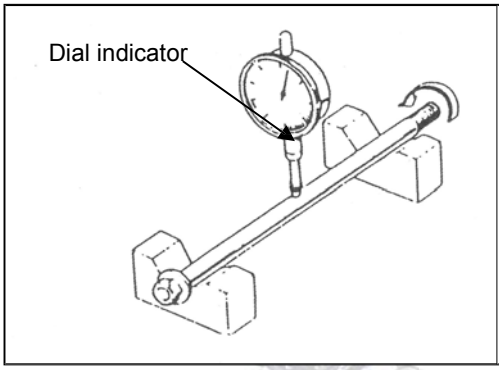

Front wheel bearing inspection

Check bearing whether is worn or damaged and dismantle front wheel axle bearing.

Place the front wheel on the calibration table, inspect the rim's deflection, and then manually rotate the wheel and measure its deflection value with a dial gauge; if the reading is no less than 2mm, replace the wheel bearing.

Disassemble, assemble and check front absorber

Front suspension device

Dismantle front wheel axle nut then check nut whether are damaged.

Dismantle front fender and take off front absorber.

Remove the front brake caliper and wire clip

Remove the wire clip and speed sensor

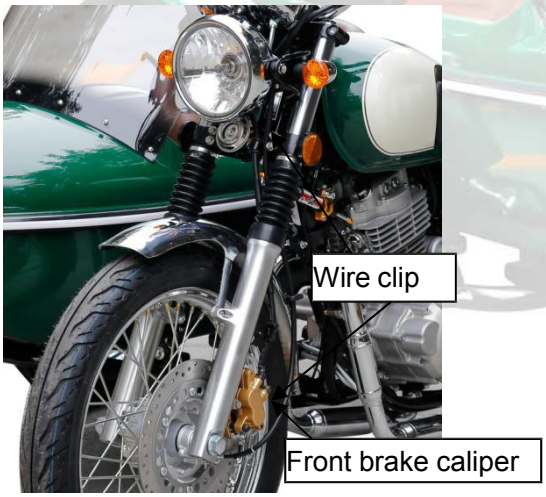

Unscrew the upper / lower connection plate bolt and. the direction of the tube bolt

Pull off the front damper

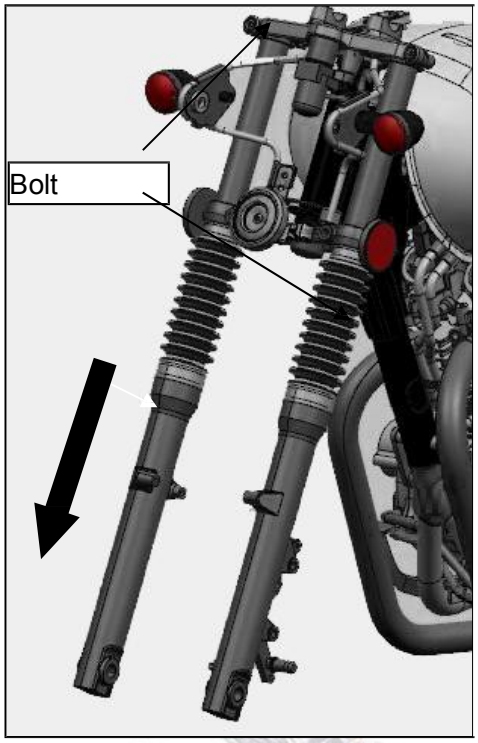

To install the front fork:

Installation is in the reverse order of removal.

⚠ **Notice**

While removing the front brake caliper, if it is unnecessary to replace, never nip the front brake handle. While installing the front brake caliper, apply the thread retaining adhesive LOCTITE 243, with the tightening torque being 20-30N.m

Check

1) Dismantle oil drain bolt and check bolt whether or not is loose.

2) Drain off absorber oil and check quality whether or not is turned.

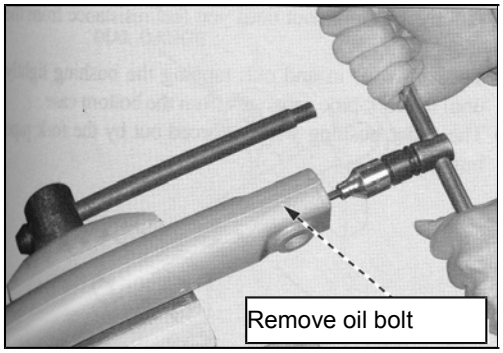

3) Take off dust sleeve, circlip and oil seal to check edge whether or not is worn and circlip is distorted.

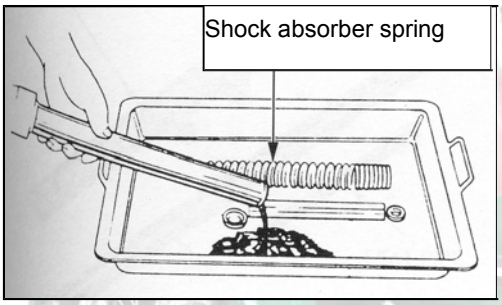

4) Oil seal assembly: in primary lip and the dust lip between coated with lubricating grease, oil seal mark up

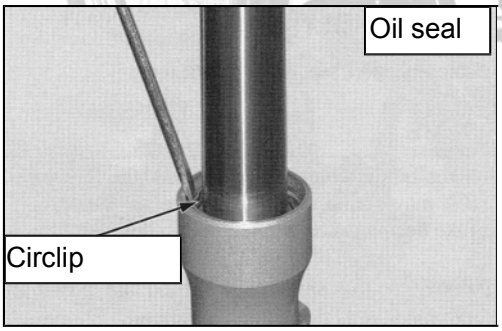

5) Check inner pipe whether or not is worn.

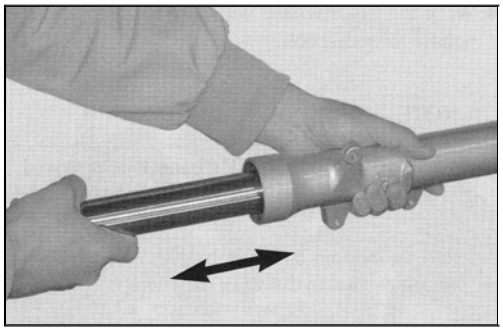

6) Dismantle circlip and return spring to check whether or not there are elasticity

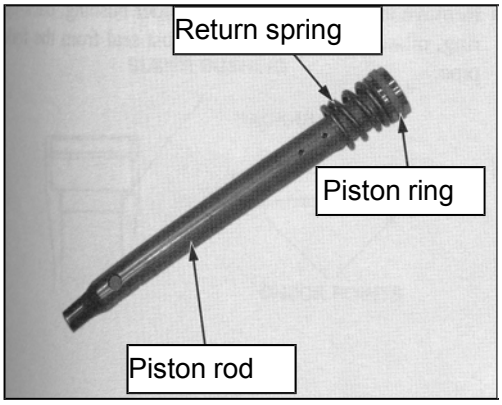

7) Measure internal diameter to check whether or not is it worn.

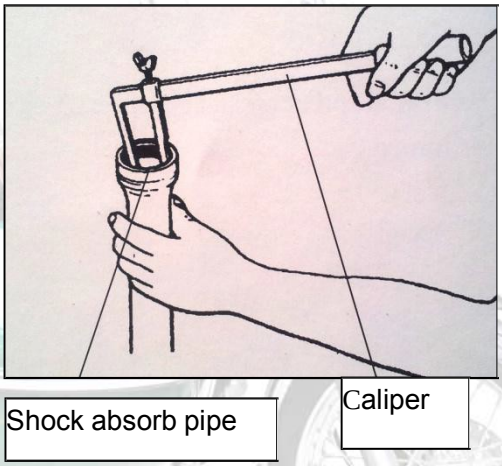

8) Measure free length of absorber spring and check it whether or not is distorted.490mm

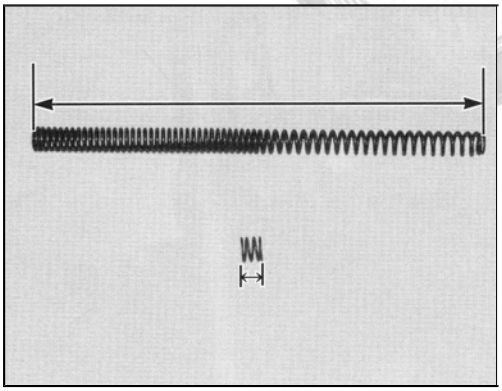

9) Check length of return spring to check it whether or not is distored.29mm

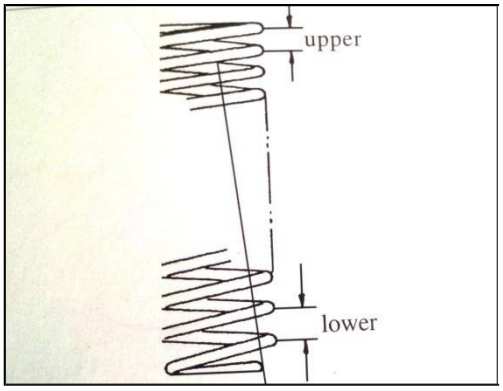

10) Fill absorber oil per standard.

Oiling quantity: 250 ± 2ml/, the brand is CN1# shock absorber oil, injected before the strict filtering, does not allow water, sand a t rf r i i i t t

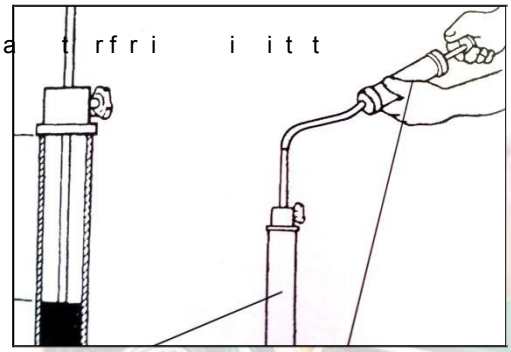

Maintenance of Suspension

Steering stem

1) Park the motorcycle on the plane ground, and remove front wheel, front fork and grip tube (control subassembly) of the whole vehicle. Refer to the related sections

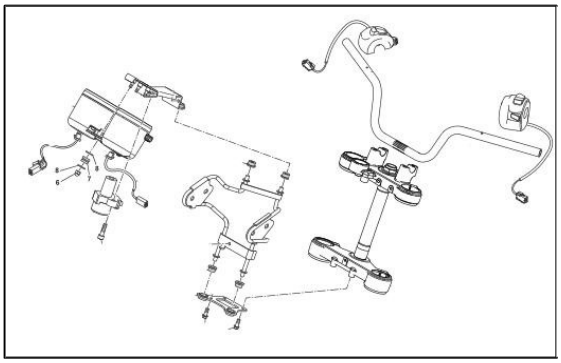

2) Remove the upper connect plate

Check steering stem, rotate teeing stem to check bearing whether is worn.

Unscrew lock nut to check it whether is damaged.

3) Use special socket for lock nut Unscrew the lock nut.

Unscrew steering stem lock nut whether is damaged.

4) Lower steering stem

Dismantle and mount outer seat ring of vertical pipe and check outer seat ring whether is worn.

Dismantle and mount inner seat ring and check whether is worn.

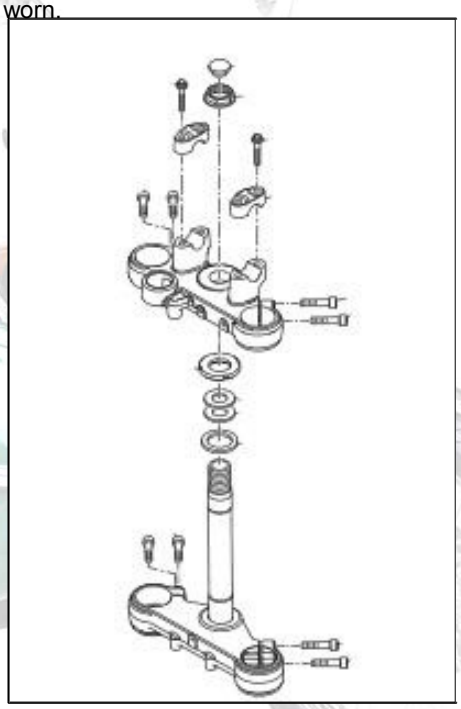

To mount of steering stem

Installation is in the reverse order of removal

Mount steering stem and lay on grease.

While installing the steering stem, adjust the adjusting nut and inspect it by turning it left and right and moving it up and down to ensure no vertical play and flexible rotating laterally.

Tighten the cap nut to the required torque of 60-70N.m.

Front brake

(1) The front brake lever should have a free operating stroke of 10-20mm as shown in the next figure.

(2) Adjustment of the free travel at the hand brake lever The free travel at hand brake lever may be readjusted by correcting the adjusting bolt【B】. The position of the point of pressure can be adjusted in this way to fit any hand sizes.

(3) After adjustment, the groove of the adjusting nut should be aligned with the pin of the brake arm.

The fluid level in the pump reservoir may never drop below the minimum notch (LOWER) (1) shown on the clear reservoir

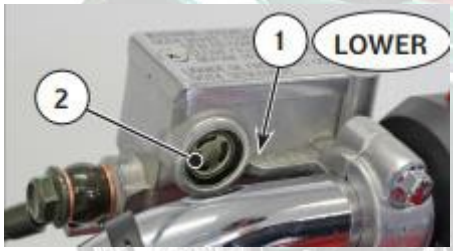

Front brake caliper inspection

1) Dismantle front brake caliper bolt

2) Operating brake, if the wears limit line of the brake shoe touch to the basket of the brake disc. It shows that the brake shoe has touched the wear limit.

Replace the brake shores.

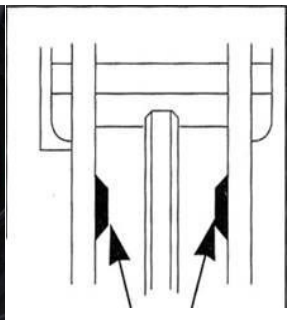

3) Take off front brake caliper and check brake shoe whether exceed limit value

Operating brake, if the wears limit line of the brake shoe touch to the basket of the brake disc. It shows that the brake shoe has touched the wear limit.

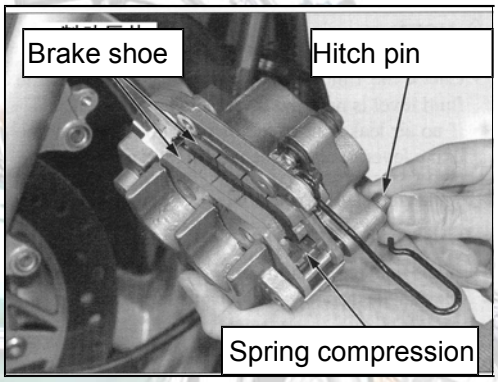

Warning:

When it is replaced with a new brake strip or brake disc, do not drive it immediately; instead, drive it after holding and releasing the front brake handle until the brake strip and the brake disc are well engaged.

Front brake disc inspection

Measure the thickness of the brake disc with an outbasket micrometer; if the thickness is no more than 3mm, replace the front brake disc. Measure the run out of the brake disc with a dial gauge;

maintenance limit:0.2mm

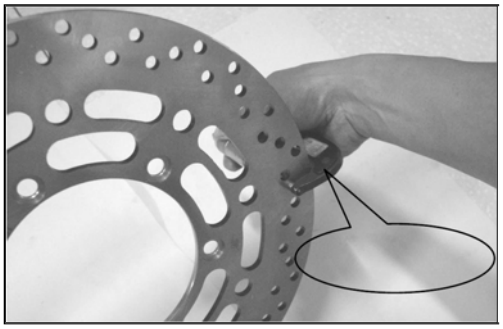

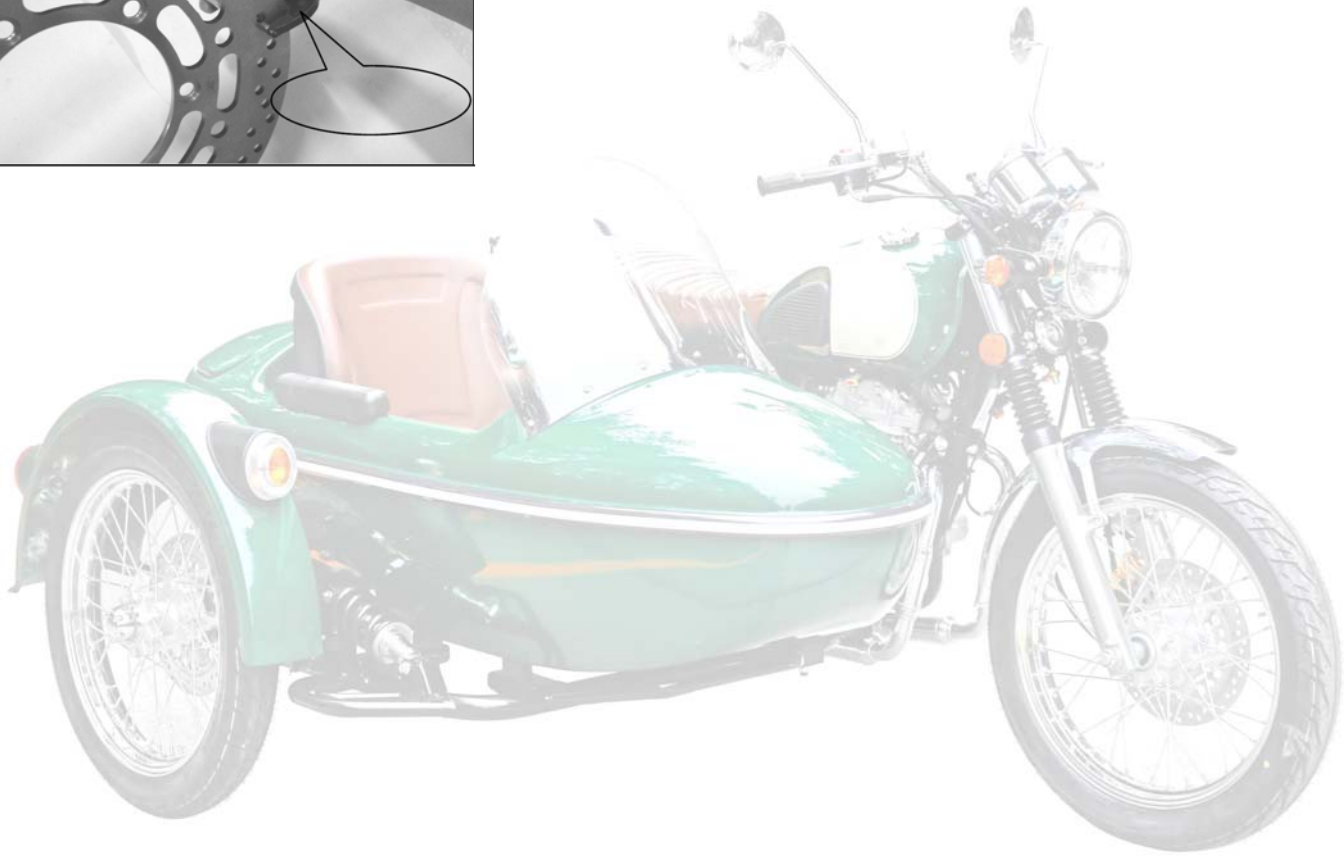

12. Rear wheel and rear suspension device

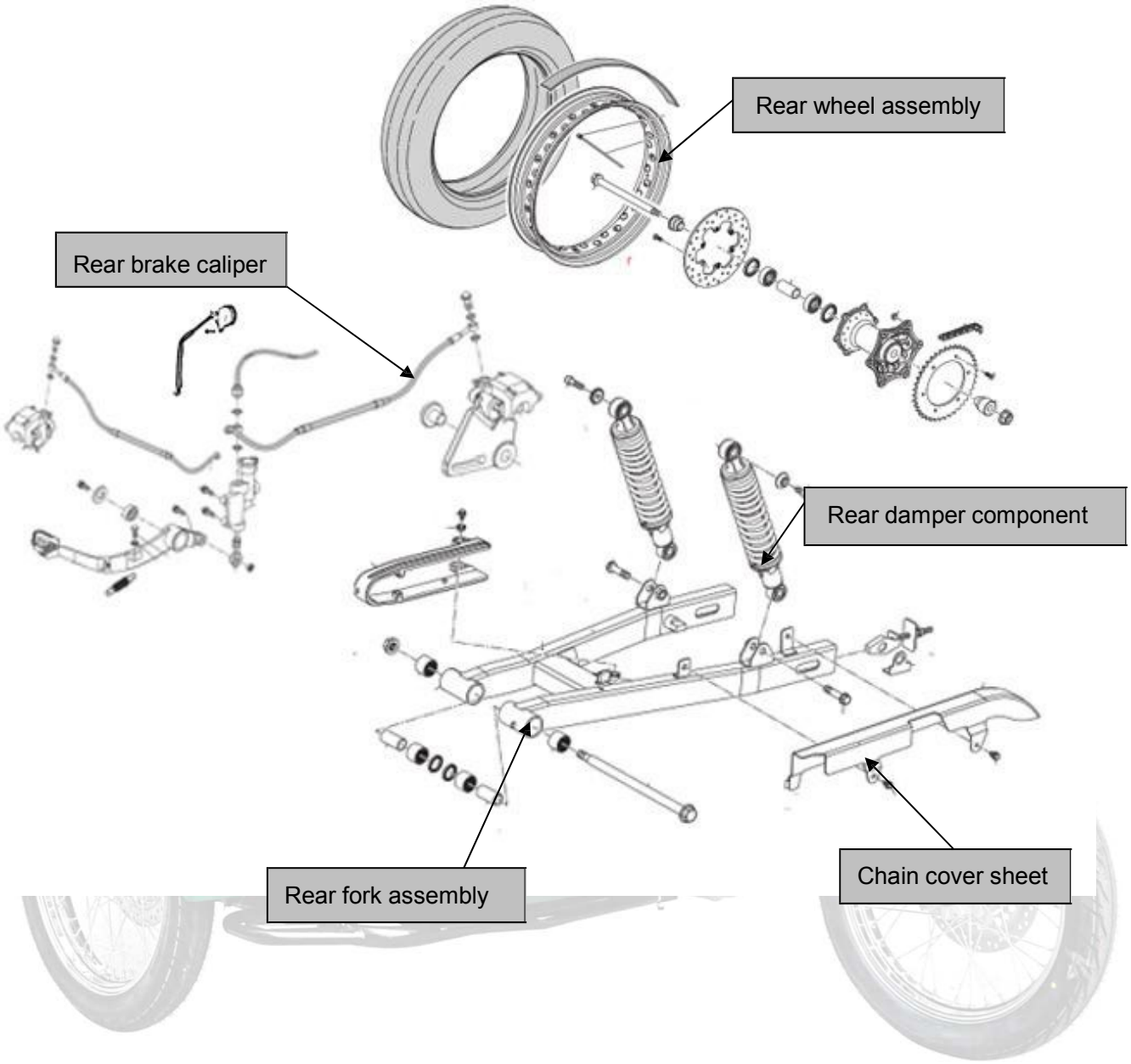

Rear wheel and rear suspension device

Maintenance notice	Rear fork
Troubleshooting	Rear shock absorber
Rear wheel	Maintenance of Rear Transmission

Maintenance notice

This section introduces the removal, installation and maintenance of the rear wheel, rear brake, rear fork and rear damper .While repairing the rear wheel and rear damper, reliably stand the motorcycle from under the engine a jack or other supports.

Key torque values

Real wheel spindle nut	60-90 N.m
Rear fork shaft nut	50-60N.m

Troubleshooting

- **Rear wheel shimmy**

1) Rim bent;
2) Rear wheel bearing worn;
3) Low tire pressure;
4) Regulator differs between left and right;
5) Wheel bush damaged.

- **Wheel hard to rotate**

1) Wheel bearing or bush damaged
2) Wheel incorrectly mounted;
3) Rear wheel spindle bent

- **Suspension device abnormal**

1) Damper spring too stiff or too weak;
2) Rear fork bearing worn;
3) Damper bent.

- **Foreign noise**

Fasteners loosened

For the damage form, fault symptom and repair method of rear wheels

Component Description	Damage form	Trouble symptom of component	Trouble symptom of motorcycle	Repair method
Rear wheel	Rear rim is twisted and deformed.	Rear rim is twisted and deformed.	Off racking in running. rear wheel wobbles in running	Replace rear rim
	The hub bearing hole is over worn	The bearing block hole has a loose match with the bearing.	Off racking in running. rear wheel wobbles in running	Replace rear rim
	The bearing is over worn and damaged	The axial and radial gaps of bearing inner and outer rings are too big or is insufficient rotation.	Off racking in running. rear wheel wobbles in running	Replace bearing
Rear tire	The inner tire is pricked or broken	Rear tire has very low pressure	Inflexible of direction handle, insufficient engine output	Repair or replace inner tire
	The tire is over worn (the tire vein depth is less than 2mm)		It is possible to slip and has a poor slip proof function	Replace outer tire

Maintenance of Rear Transmission

Component description	Damage form	Trouble symptom of component	Trouble symptom of motorcycle	Repair method
Sprocket and cam sprocket	Gear is over worn		Drive chain has abnormal sound, drive chain is easy to fall out.	Replace sprocket and cam sprocket
Drive chain	Too dirty or poor lubrication		Drive chain has abnormal sound	Clean and lubricate the chain.
	Improper chain tightness.	Chain is over tight	Drive chain has abnormal sound	Adjust the chain tightness to 15~25mm
		Chain is over loose	Drive chain is easy to fall out.	
	Over worn		Drive chain has abnormal sound, and is easy to fall.	Replace drive chain

Maintenance of Rear Suspension

Component description	Damage form	Trouble symptom of component	Trouble symptom of motorcycle	Repair method
Rear shock absorber assembly	Rear shock absorber spring is broken or with insufficient elastic force	Rear shock absorber spring is broken or with insufficient elastic force	Rear shock absorber is over soft or over hard	Replace rear shock absorber spring
	Leakage at rear damper	Leakage at rear damper	Leakage at rear shock absorber, rear shock absorber is over soft	Replace rear damper
	Piston rod on rear damper is bent, deformed or broken	Piston rod on rear damper is bent, deformed or broken	Rear shock absorber is over hard	Replace rear damper

For the damage form, fault symptom and repair method of Rear brake

Item	Damage form	Trouble symptom of component	Trouble symptom of motorcycle	Repair method
Rear brake main pump assembly	brake 1iquid is insufficient	brake liquid is insufficient	brake lose effect	fill DOT4 to upper limit mark
	dirty brake liquid		brake lose effect	Replace the brake fluid
	surface of wall is damaged		brake lose effect	
	wall is over worn		brake lose effect	replace main pump
	oil case is cracked	oil leakage	brake lose effect	replace main pump
	piston surface is cracked		brake lose effect	replace main pump piston
	piston is damaged		brake lose effect	replace main pump piston
Rear brake caliper	air entry into oil pipe		brake lose effect	exhaust rear brake oil way
	oil pipe is broken	oil leakage from oil pipe	brake lose effect	replace oil pipe
	Rear brake oil pipe is	oil pipe is clogged	brake lose effect	clean or replace oil pipe

	clogged			
	wall is broken or cocked		brake lose effect	replace Rear brake caliper
	wall is over worn		brake lose effect	replace Rear brake caliper
	Rear brake caliper is broken	oil leakage from Rear brake caliper	lose effect	replace Rear break caliper
	seal ring is broken or worn	oil leakage	lose effect	replace rear break caliper
	friction plate is over worn		lose effect	replace friction plate completely
	surface of piston is damaged or worn		abnormal sound or lose effect	replace brake caliper piston
	guide pin is clipped		Rear break lose effect or spring cannot be returned	clean or lubricate guide pin
Rear brake disc	over worn(1ess than limit value3mm)		Rear brake lose effect	replace rear brake disc
	distorted		abnormal sound or lose effect	replace rear brake disc

Rear wheel

To remove the rear wheel.

1) Stand the motorcycle with a jack to lift the rear wheel above the ground.

2) Remove the chain set.

3) Unscrew the rear wheel nuts、the brake pull rod、Brake limit lever and remove the rear wheel spindle.

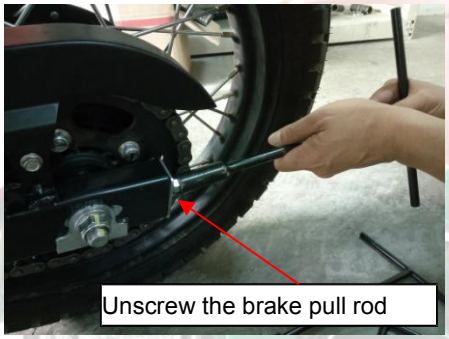

4) Dismantle rear wheel axle nut to check it whether is loose and damaged

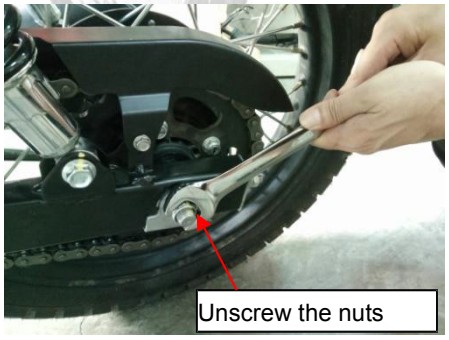

5) Remove the chain link and remove the drive chain.

6) Dismantle clip of chain and take off chain

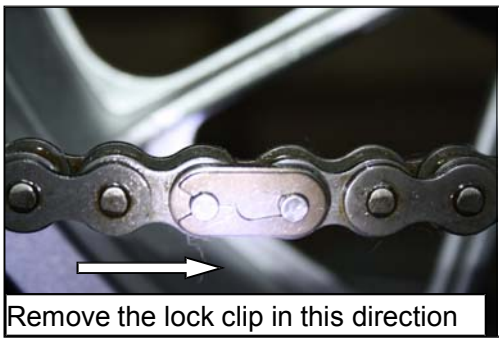

7) Take out the rear wheel assembly and the spindle bush.

Installation of rear wheel

Installation is in the reverse order of removal.

While mounting the rear wheel, make sure the spindle bushes on both baskets are aligned and the brake caliper clamps the rear wheel hub. While installing, properly adjust the chain adjuster to ensure that the chain slack is between 15mm and 25mm and that the left and right scale lines of the chain adjuster are consistent, and then fasten the rear wheel spindle nut to the required tightening torque of 50-60N.m

Warning

The rear wheel spindle must be firmly screwed up to the required torque of 50-60N.m

Rear wheel spindle inspection

Dismantle front wheel axle nut and take out rear wheel axle to check it whether is distorted.

Place the rear wheel spindle on the V-holder, and measure the deflection of the wheel spindle with a dial gauge; if the reading is no less than 0.2mm, replace the rear wheel spindle.

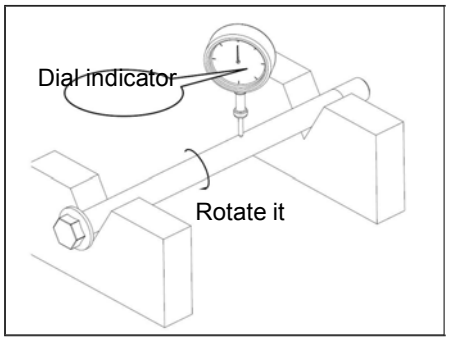

Rear wheel bearing inspection

Check rear wheel axle bearing whether is worn or damaged and take out bearing.

Place the rear wheel on the calibration table, inspect the rim's deflection, and then manually rotate the wheel and measure its deflection value with a dial gauge; if the reading is no less than 2mm, replace the wheel bearing

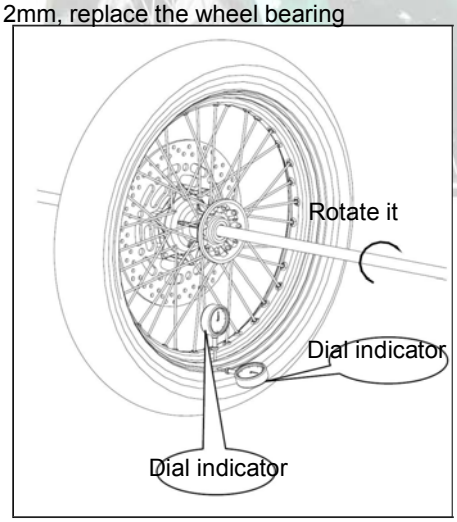

Maintenance of Rear Transmission

Disassemble, assemble and check rear drive device

1) Dismantle bolt of gear shift lever to check gear shift lever and gear shift shaft whether are damaged.

2) Dismantle left rear cover to check bolt and bolt hole whether are damaged.

3) Dismantle chain case to check bolt and nut whether are damaged.

4) Dismantle small sprocket bolt to check bolt whether is damaged.

Check the tooth form of the rear sprocket, and replace it in case of serious damage. While replacing, directly remove the nut; and apply the thread retaining adhesive LOCTITE243 on the rear sprocket retaining screw, with the tightening torque being 20-30N

Take out bush and dismantle bolt of rear driven chain disc.

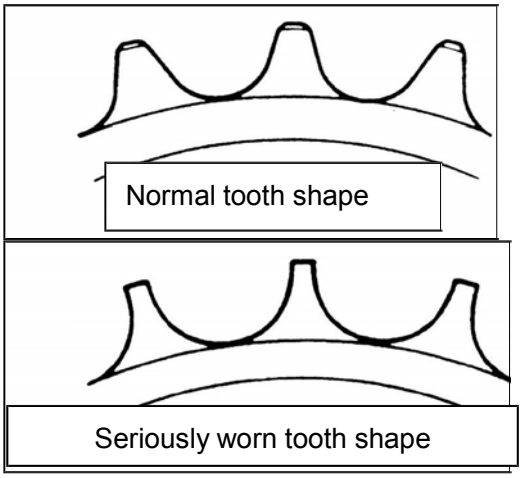

Check chain abrasion and deformation.

Check chain joint pin whether is loose or worn and clip whether is deformed

Check chain abrasion and deformation.

Check chain joint pin whether is loose or worn and clip whether is deformed.

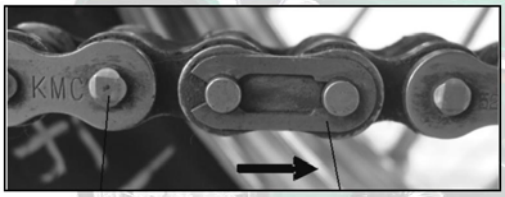

Rear fork

To remove the rear fork:

1) Remove the rear wheel assembly first (See “Removal of rear wheels”).

2) Unscrew the rear fork shaft nuts and pull out the rear fork shaft from the left

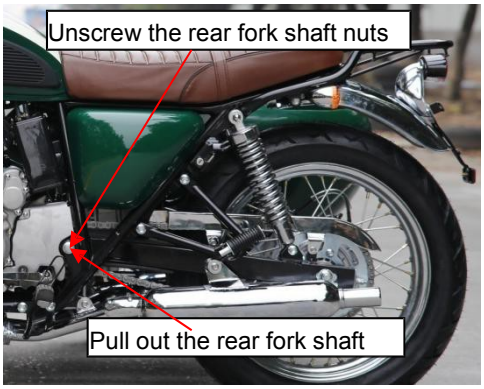

3) Remove the rear shock absorber and rear fork connecting bolt.

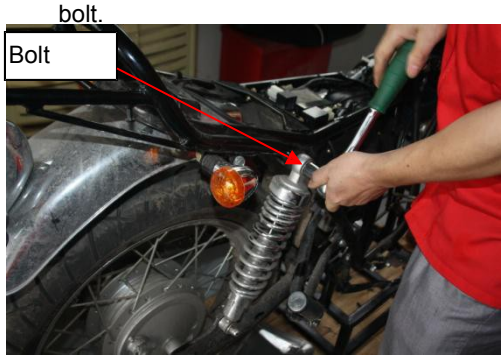

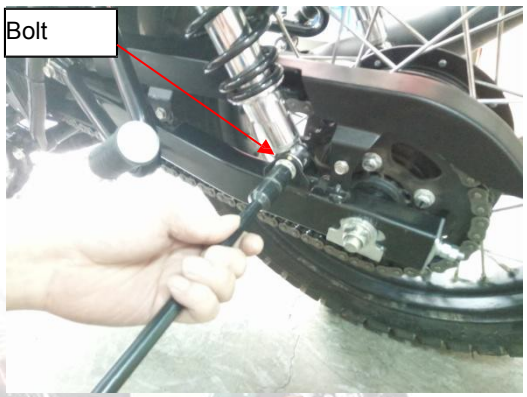

4) Take out the rear fork backwards.

To install the rear fork:

Installation is in the reverse order of removal..

While installing the rear fork shaft, make sure that the end covers shall be aligned and that the tightening torque of the rear fork shaft retaining nut is 50-60N.m,

Warning:

The rear fork retaining nut must be firmly screwed up to the required torque of 50-60N.m.

Rear fork shaft inspection

Place the rear fork shaft on the V-holder, and measure the deflection of the rear fork shaft with a dial gauge; if the reading is no less than 0.2mm,

Replace the rear fork shaft.

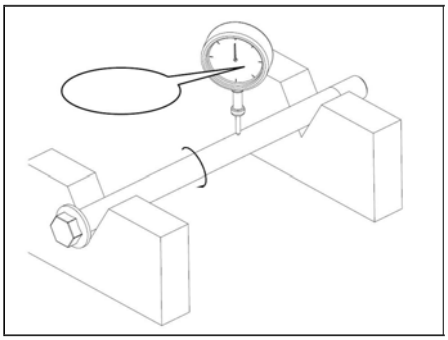

Rear fork bearing inspection

Replace the removed seal ring and needle bearing with new ones. After installation, ensure the needle bearing is 3mm away from the end face and apply lithium base grease on the needle bearing. After the installation is complete, check whether the needle bearing can rotate flexibly.

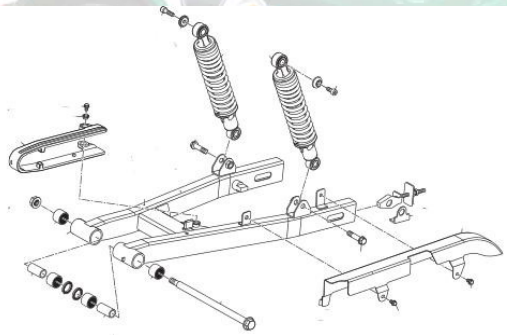

Disassemble, assemble and check rear absorber

Remove the bolt connecting the frame

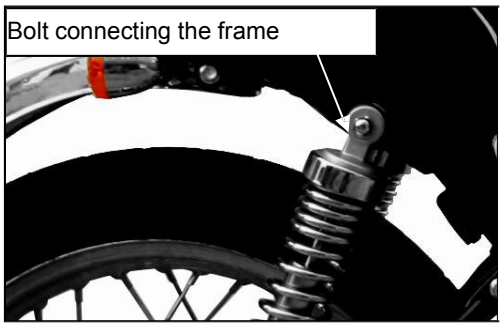

Remove the bolt connecting the rear fork.

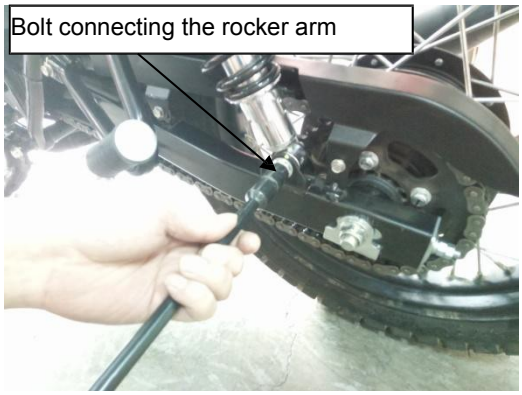

Rear shock absorber spring preload adjustment

The rear shock absorber (1) spring preload can adjusted; to make the adjustment, operate as follows:

- Using an appropriate spanner, turn the ring nut (2) positioning the adjuster (3) in correspondence to the catch (4).
- For a softer adjustment, move the adjuster (3) towards position “1” and for a harder adjustment move it towards position “5”.

Standard adjustment is in position “2”.

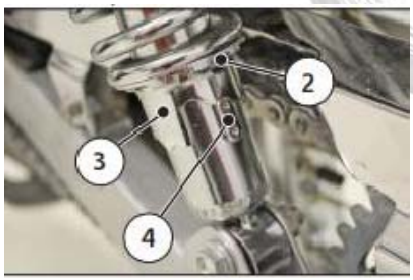

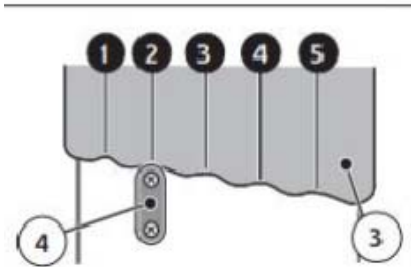

To install the rear damper:

Installation is in the reverse order of removal. While installing, use the upper hole for the lower installation of the damper.

⚠ **Notice:**

Before removing the damper, the tightening torque of the bolt connecting the frame is 30-40N.m, and the tightening torque of the bolt connecting the rear fork is 30-40N.m

Rear brake

Rear brake pedal free play adjustment

The rear brake pedal should have a free play 3mm before the brakes begin to bite.

Should this not happen, operate as follows:

- loosen nut;

- operate the pump rod to increase or decrease the free play;

- tighten nut at the end of the operation.

Warning:

In the absence of the required free play, the brake pads will rapidly wear, consequently running the risk of the brake becoming totally inefficient or the rear brake locking.

- The fluid level in the pump reservoir may never drop below the minimum notch (LOWER) shown on the clear reservoir

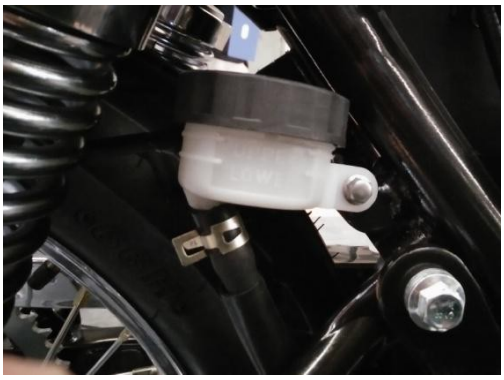

Rear brake caliper inspection

- Remove the rear wheel assembly first (See “Removal of rear wheels”).
- Remove the rear brake shoes

Brake pad wear check

Check the state of wear of the rear brake pads.

- The pads have a groove that indicates wear; when the groove has almost disappeared, the pair of brake pads have to be replaced.

Caution

Contact an SHINERAY dealer to have the brake pads replaced.

Warning:

After the brake pads have been replaced, ride carefully and brake gradually in order to allow the brake pads to properly run in/couple to the relative discs.

Rear brake disc inspection

Measure the thickness of the brake disc with an outbasket micrometer; if the thickness is no more than 3mm, replace the rear brake disc.

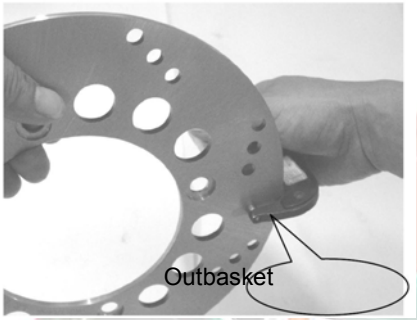

Measure the runout of the brake disc with a dial gauge; if the runout is no less than 0.2mm, replace the rear brake disc.

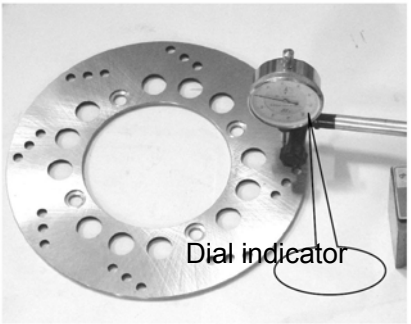

13、Basket wheel, basket bucket, basket rack

Maintenance notice	Basket brake
Basketcar assembly	Basket car frame
Basket car wheel	

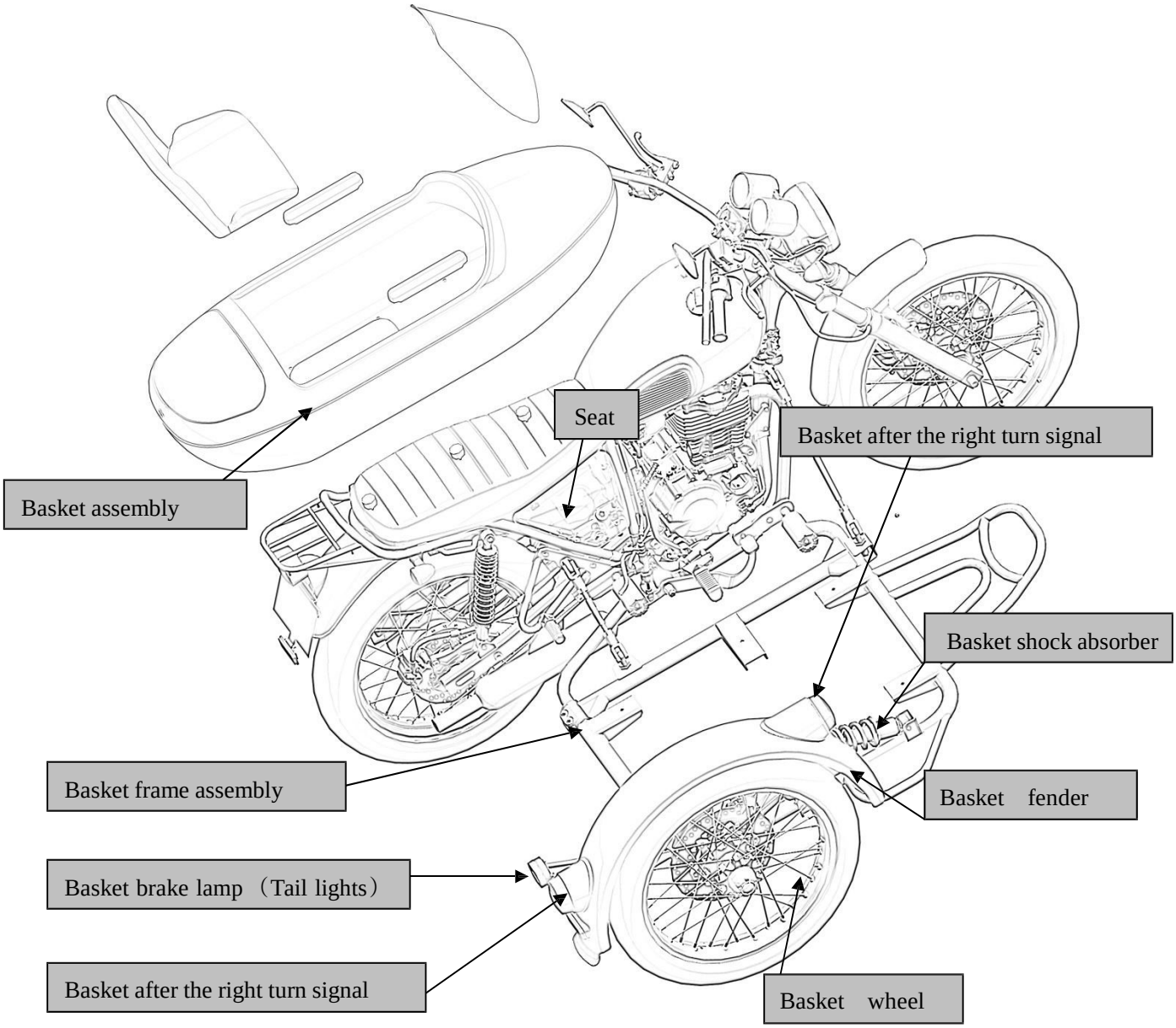

Basket wheel, basket bucket, basket rack

Maintenance notice

This section introduces the disassembly, installation and maintenance of basket bucket, basket wheel, basket brake and basket rack.

If the welding combination is to be removed, the basket frame shall be supported by a jack or other support at the bottom of the basket frame。

Significant torque value

Basket bucket tighten nut	39 ~ 49N. M
Rim seat fastening bolts	39 ~ 49N. M
Rim nut	80 ~ 100N. M
Basket brake clamp body fastening bolt	18 ~ 25N. M
Brake disc fastening screw	20 ~ 30N. M

Basket

Basket disassemble

1) To support the bottom of basket frame by jack or other support

2) To loose front and rear total 6 bolts.

3) Remove the basket

4) To losse these two bolts and remove seat.

Basket assemble

To have reverse process order of disassemble.

& Caution

The fastening torque of the basket fastening nut and the seat fastening bolt is 39 to 49Nm.

Basket wheel

Basket wheel disassemble

1) Remove basket first

2) Disassemble basket caliper ,keep hose and caliper connected.

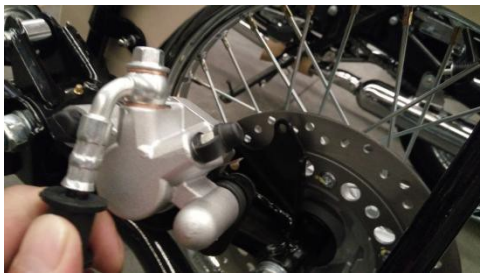

Don't touch brake pedal when you disassemble caliper

3) Remove spring pin, loose the bolt, and remove basket wheel

Basket wheel assemble

To have reverse process order of disassemble

To assemble basket caliper on basket brake disk.Tight the bolt and apply adhesives LOCTITE 243 by 18 ~ 25N.m.

Coat the wheel axle with a lithium base grease before installing the wheel

When installing the basket wheel, do not fit the inner sleeve of the basket wheel with the outer shaft. Torque requirements for basket wheel nut is 80-100N.m.

Basket wheel bearing inspection

Check **basket** wheel axle bearing whether is worn or damaged and take out bearing.

Place the basket wheel on the calibration table, inspect the rim's deflection, and then manually rotate the wheel and measure its deflection value with a dial gauge; if the reading is no less than 2mm, replace the wheel bearing

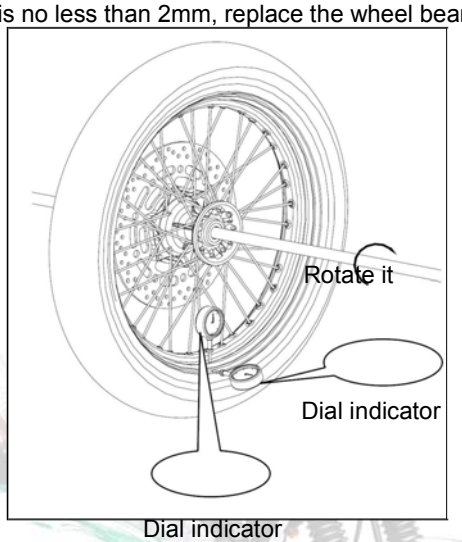

Basket brake

Basket brake disc inspection

Measure the thickness of the brake disc with an outbasket micrometer; if the thickness is no more than 3mm, replace the basket brake disc.

Measure the runout of the brake disc with a dial gauge; if the runout is no less than 0.2mm, replace the basket brake disc.

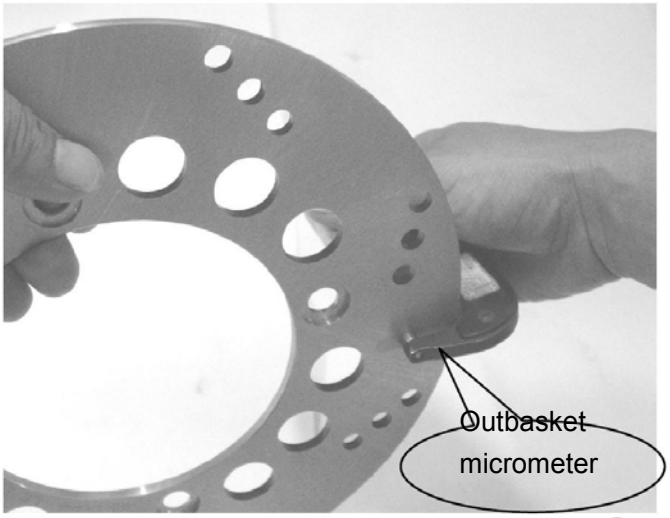

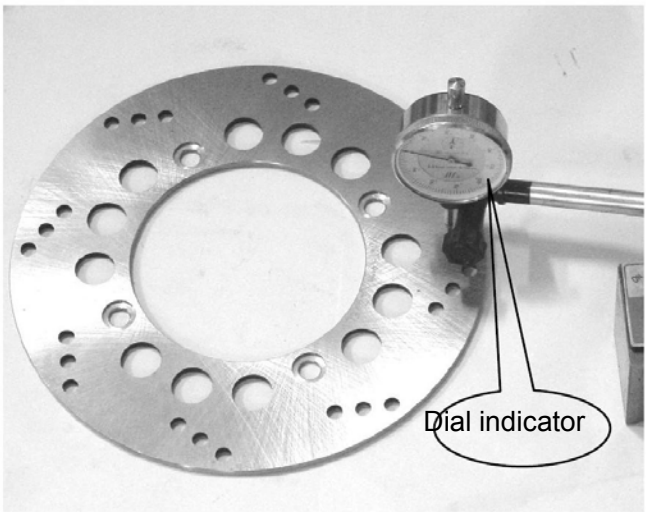

Brake pad wear check

Remove the basket brake shoes, Check the state of wear of the rear brake pads.

- The pads have a groove that indicates wear; when the groove has almost disappeared, the pair of brake pads have to be replaced.

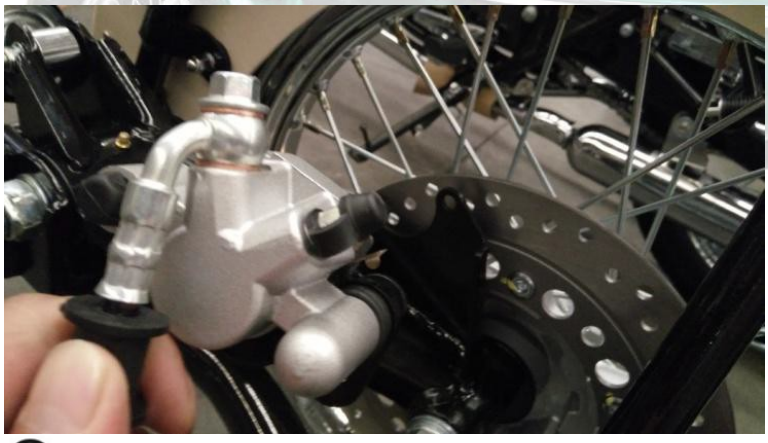

Warning:

When it is replaced with a new brake strip or brake disc, do not drive it immediately; instead, drive it after treading the rear brake pedal until the brake strip and the brake disc are well engaged.

Basket frame

1) To remove basket first

2) To remove Steering knuckle arm

3) To remove basket shock absorber

4) To remove basket rocker arm

5) Remove basket taillight wire, then remove tail light.

Remove basket position light and turning cable

6) Remove rocker arm connector A and B

- Connector A
- connector B

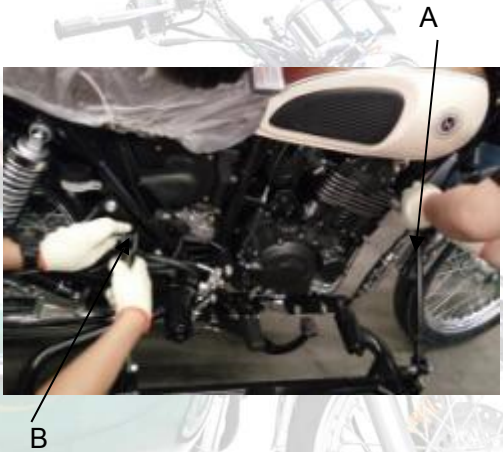

- Remove this bolt

Basket frame assemble

To have reverse process order of disassemble..

Tight the bolt and apply adhesives LOCTITE 243 by 18-25N.m.

14. General remarks of electrical system

Precautions for circuit inspection	System principle and composition

Precautions for circuit inspection

1) While disengaging or engaging the patch plug, turn the ignition switch to OFF position, otherwise the electrical elements may be damaged.
2) While checking the circuit, use a stylus that can be inserted from the front and rear ends of the connector and can contact the terminals reliably.
3) To carry out the line on/off inspection, turn off the power supply and the related electrical elements.
4) To carry out inspection with voltage, check the accumulator voltage first.
5) In case of electrical system failure, diagnose according to the following steps:
   A. Observe the failed behavior to determine which sub-system fails.
   B. According to the circuit schematic drawing, use the process of elimination (POE) to narrow down the possible failure scope.
   C. Check the sub-system line for open circuit, short circuit or wrong connection.
   D. Check the related components for failure or damage.

1) While looking up the line failures, check where the removal is convenient first following the principle of “searching from easy to difficulty”. Both the parameter detection method and the parts replacement method are acceptable. However, if the parts replacement method is used, you should confirm whether or not overload has occurred in the line, as this may damage the new spare parts.
2) A multicenter must be permanently available for the circuit inspection.
3) Most of the instant electrical failures are caused by cable connector or electric wire failure.

System principle and composition

The electrical system is an important guaranty for the motorcycle’s running, safety running, reliable running and efficient running. It involves many aspects, including contents of several subjects, including electric machine, electrical, electronics, computer, electrochemistry, acoustics, optical material, etc. The development of electronics will especially influence the motorcycle’s electrical system significantly. XY400B’s electrical system uses a lot of advanced vehicle electronics technologies that are much more complicated then the traditional motorcycle. It comprises the following sub-systems:

- Power supply system
- Starting system
- Engine management system
- Illumination signal system

Information display system

We shall give detailed explanations separately in the following section

15. Power supply system

Overview	Major parts and components
Circuit schematic drawing	Major faults diagnosis
Maintenance of Charging System	

Overview

Power supply system is the precondition for a complete vehicle to operate, capable of providing sufficient electric energy for other electrical systems. The main contents include recharging, charge storing and discharging. XY400B power supply features large power supply capacity as high as more than 250W. It comprises the following parts and components:

- Magneto
- Variable voltage rectifier
- Accumulator
- Combined ignition switch
- Various fuses

Circuit schematic drawing

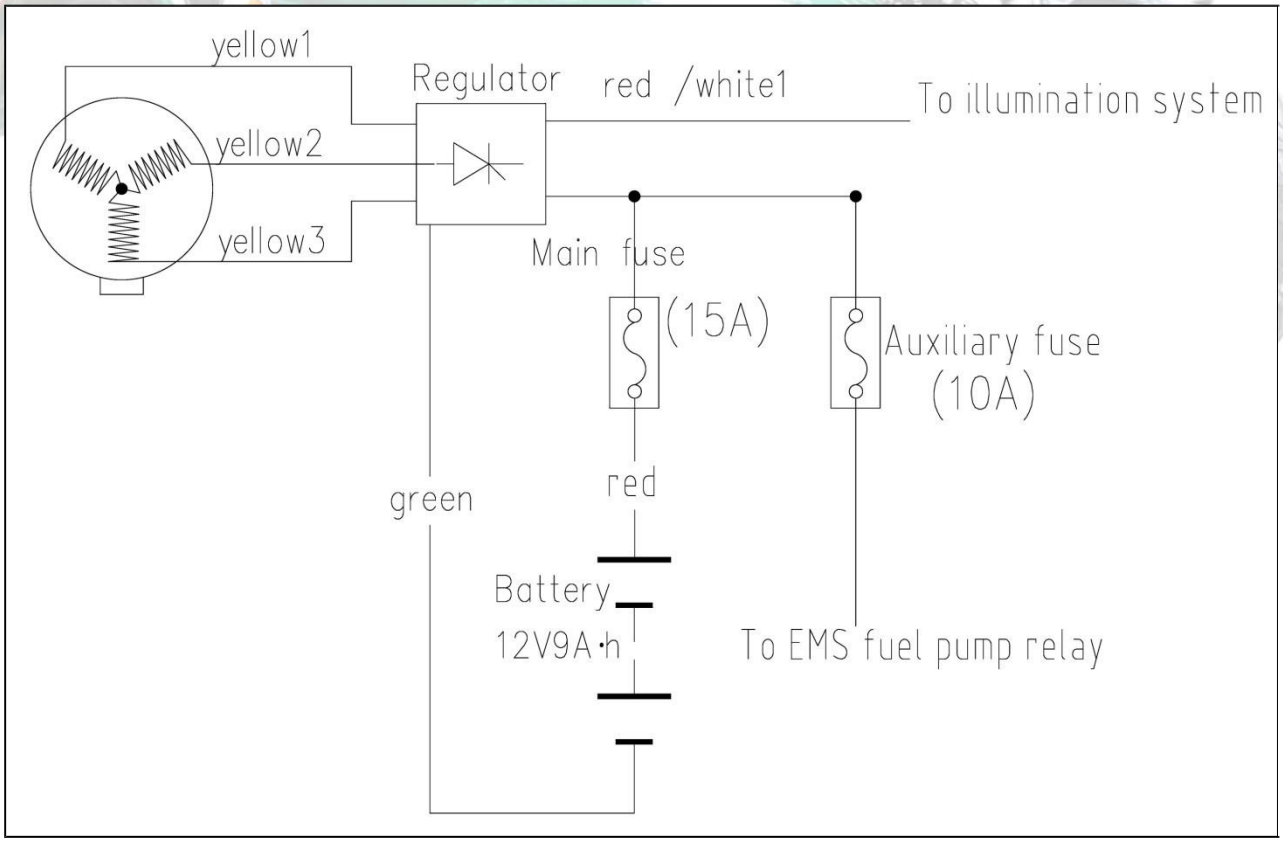

Maintenance of Charging System

Disassemble. assemble and check charging system

1. Check socket whether contact well.

2. Dismantle rectifier bolt and measure two yellow wire whether is short circuit or broken circuit by millimeter.

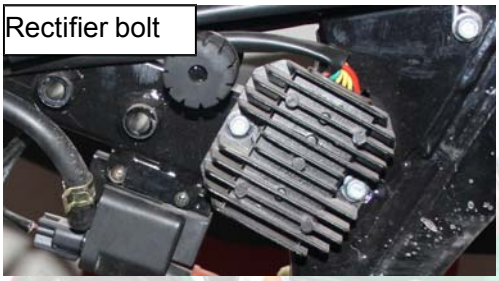

3. Open left cover to check magneto coil whether is burned or loose.

4. Dismantle magneto bolt and replace magneto coil.

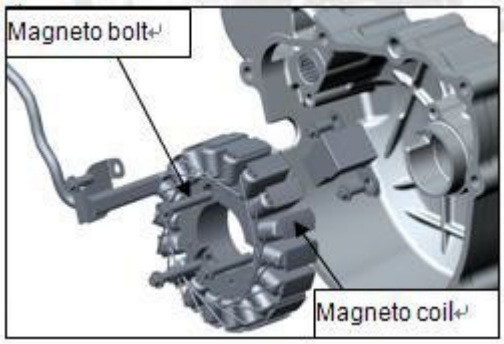

5. Dismantle starting clutch and replace magnetic case.

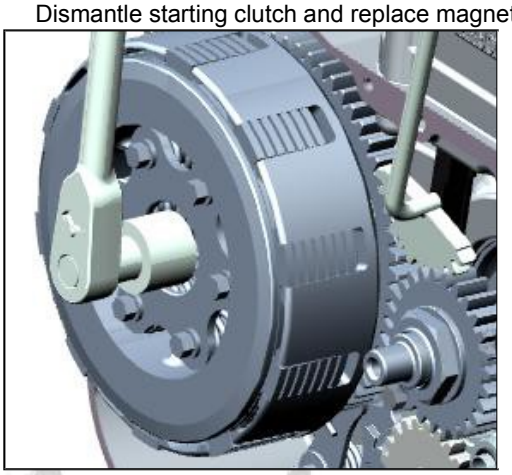

6. Check plate electrode whether is damaged

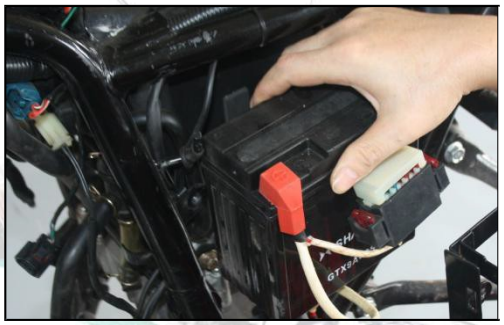

7. check connector socket of rectifier and measure output voltage by multimeter to (13.0-13.3)v

8. Check fuse pipe whether is damaged.

Major faults diagnosis

Phenomenon	Possible causes	Solutions
● No electricity in the complete vehicle: ● Replace main fuse; ● While turning on with the key, the meter has no display, and other electrical functions do not work.	● Main fuse is blown; ● Main fuse circuits contact poorly; ● Accumulator's positive and negative poles contact poorly; ● No electricity in accumulator; ● Ignition switch failed; ● Ignition switch outgoing line and the main cable poorly plugged; ● The main cable related circuit open circuit or short circuit	● Replace main fuse ● Re-plug. ● Reconnect; ● Recharge or replace; ● Repair or replace; ● Re-plug. ● Repair or replace;
● Low accumulator voltage: ● While powering on, the meter's voltage alarm lamp blinks; or the accumulator's terminal voltage is less then 12V.	● The vehicle has been stored for too long, and the accumulator has discharged automatically; ● Charging circuit fails in the complete vehicle. ● Accumulator fails to store charge.	● Recharge it with DC voltage stabilizing charger; ● Check the charging circuit. ● Replace accumulator.
● Accumulator charges insufficiently; ● After the engine is started, the meter's voltage alarm lamp blinks; or the accumulator's terminal voltage is less then 13V.	● Variable voltage rectifier's outgoing line is poorly contacted or plugged with the main cable or magneto; ● Related lines of the main cable are open or shorted. ● Magneto fails; ● Variable voltage rectifier fails; ● Accumulator fails to store charge.	● Re-plug ● Repair or replace; ● Replace the magneto; ● Replace the variable voltage rectifier; ● Replace accumulator.
● Accumulator overcharged; ● Large amount of air bubbles burst out from the accumulator.	● Variable voltage rectifier fails.	● Replace it.

15. Starting system

Overview

Overview	Major parts and components
Circuit schematic drawing	Major faults diagnosis
Maintenance of starting system	

When the engine starts to work, an exogenous action is needed to help it run, thus entering the ignition & fuel supply procedure to enable the internal combustion engine to combust repeatedly and work steadily. XY400B motorcycle is only equipped with electric controlled starting. First, release it from the protection of shift position switch, basket stand switch and clutch switch; then press down the start button to power on the relay, start the engine to drive the idle gear and starter gear, thus enabling the engine to enter its operating cycle for normal ignition, fuel injection and combustion. The system consists of the following components:

- Starting motor;
- Starting relay;
- Accumulator;
- Start switch and flameout switch;
- Neutral position switch and clutch switch.

Circuit schematic drawing

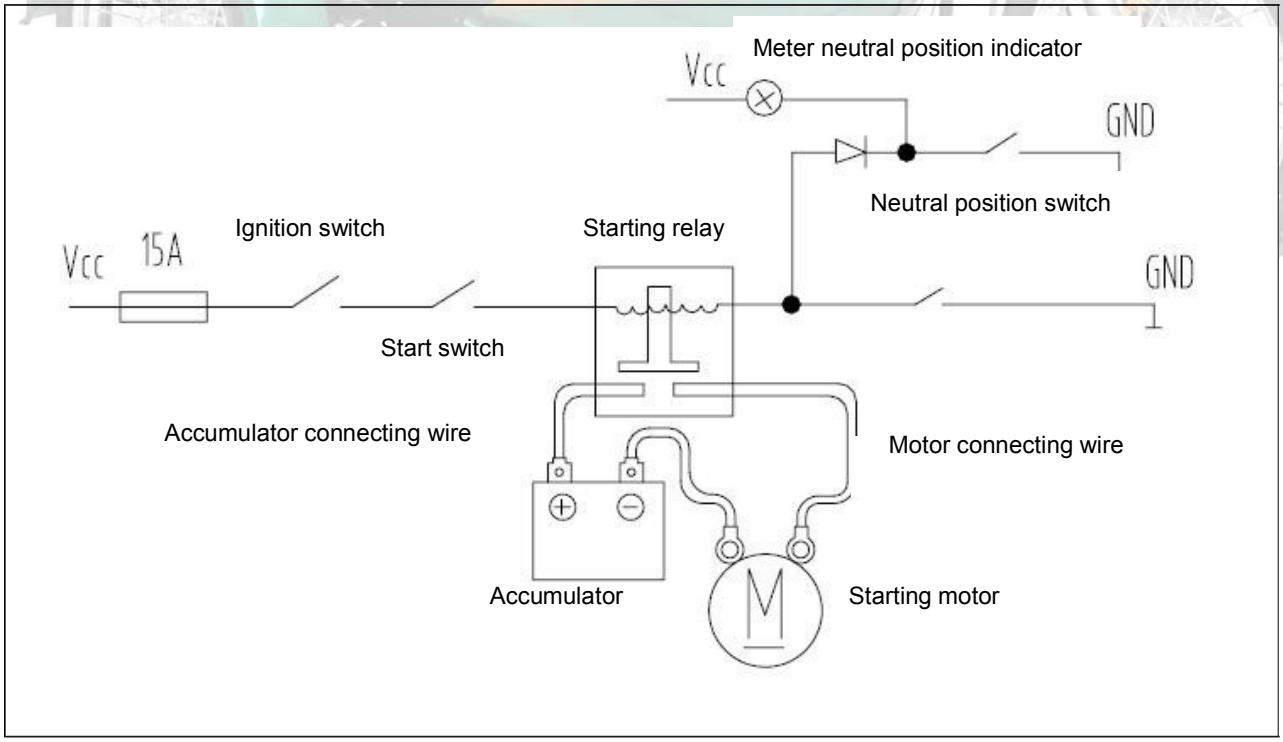

Maintenance of starting system

Disassemble, assemble and maintain

1. Turn on ignition switch and flameout switch to check electrical start whether energize.

2. Check plate electrode whether is damaged

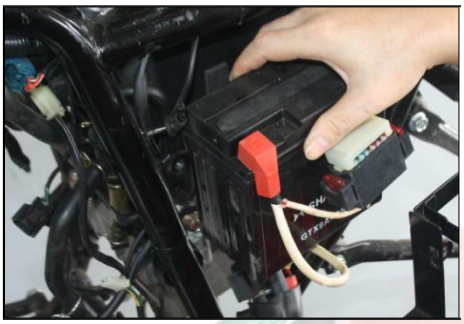

3. Check charging coil of magneto whether is charged.

4. Check rectifier whether is charged.

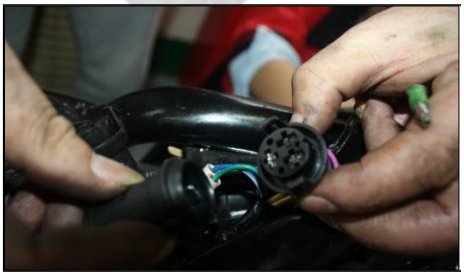

5. Check fuse whether is burned.

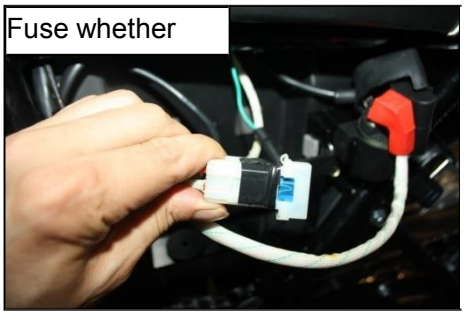

6. Check positive and negative pole of battery whether

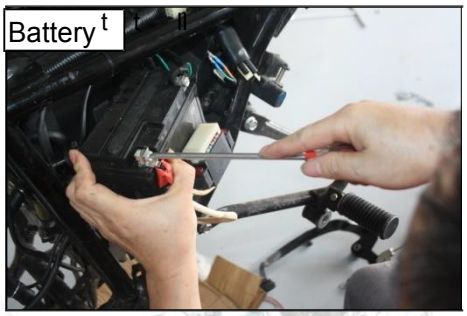

7. Check relay whether is damaged

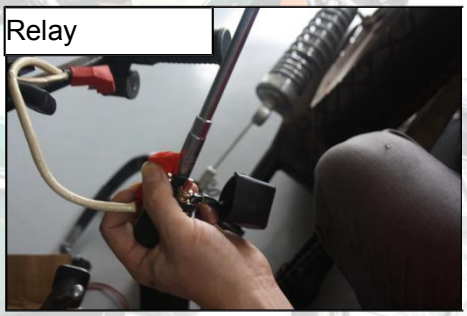

8. Check magneto coil whether contact well.

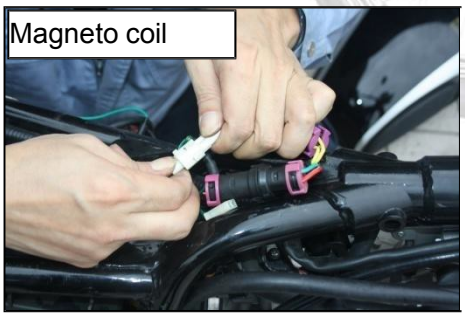

9. Check electrical starting switch whether contact well.

10. Turn on electrical starting button to check whether is rusted or energize.

11. Turn on flameout switch to check it whether is rusted or

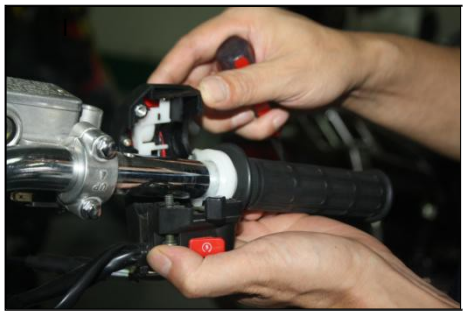

12. Check switch plug of relay whether is loose.

13. Check clutch electrical starting switch plug whether is damaged or loose.

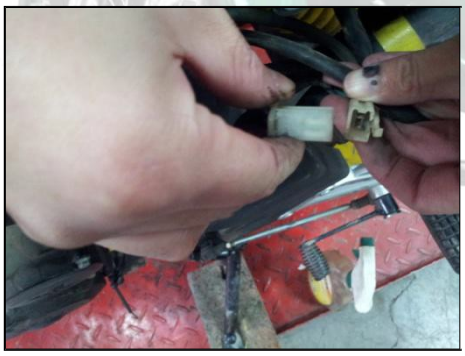

Major faults diagnosis

Phenomenon	Possible causes	Solutions
● Starting relay doesn't attract; ● No sound of relay suction can be heard while pressing the start button, and the starting motor doesn't run.	● Accumulator voltage too low; ● Corresponding fuse is not connected or is blown; ● The Neutral line of the shift position switch is open circuit ● Clutch switch open circuit failure; ● Start button open failure; ● Flameout switch open circuit failure; ● Starting relay failed; ● Related lines of the main cable are open.	● Recharge the accumulator; ● Connect the fuse or replace it; ● Connect the line or replace shift position switch ● Connect the line or replace clutch switch ● Connect the line or replace the left switch; ● Connect the line or replace the left switch ● Replace the starting relay; ● Repair or replace main cable.
● Starting motor doesn't rotate: there is the sound of relay suction, however, the motor doesn't rotate.	● Accumulator voltage too low; ● Heavy line connector lug slackened; ● Motor open circuit failure; ● Open circuit between the terminal contacts of the starting relay; ● Motor short circuit failure; ● Engine clogged, motor rotation jammed.	● Recharge the accumulator ● Fasten the connector lug; ● Replace the motor ● Replace the starting relay ● Replace the motor; ● Check the engine.
● Motor rotating speed too low	● Accumulator voltage or capacity too low; ● Connector lug contacts poorly; ● Starting motor's output torque is insufficient； ● Motor resistance too large.	● Recharge or replace accumulator; ● Fasten the connector lug; ● Replace the motor; ● Check the engine.

17. Illumination signal system

Overview	Major parts and components
Circuit schematic drawing	Major faults diagnosis

Overview

Illumination signal system is an important guaranty for the safe driving of the vehicle. It includes the headlamp illumination system, signal lamp control system and horn system.

Headlamp illumination system:

We need to use the headlamp to illuminate the road surface and inform the surrounding vehicles or people of its presence while driving at night; use the high-beam while driving at intermediate or high speed, and use the low-beam while meeting other vehicles; the low-beam shall be anti-dazzled

Signal lamp control systems:

In a turning drive, the vehicle shall prompt the surrounding vehicles and people to dodge by the flash of the turn lamp; while driving at night, it shall inform of its presence by the tail lamp's front / rear position lamp, and illuminate the number on the license plate; while braking, it shall illuminate the brake lamp to inform the vehicle behind of its braking deceleration. The flash of the turn lamp is controlled by a switch and a flasher, and the illuminations of other lamps are controlled only by a switch.

Horn system:

When there are other surrounding vehicles or pedestrians are or will likely hinder your driving, use horn to alert them for safe driving. The operation of the horn is controlled by the horn button.

Constituting parts and components:

- Head lamp
- Combined rear position lamp
- Horn
- Front brake lamp switch
- Rear brake lamp switch
- Left / Right combination switch

Circuit schematic drawing

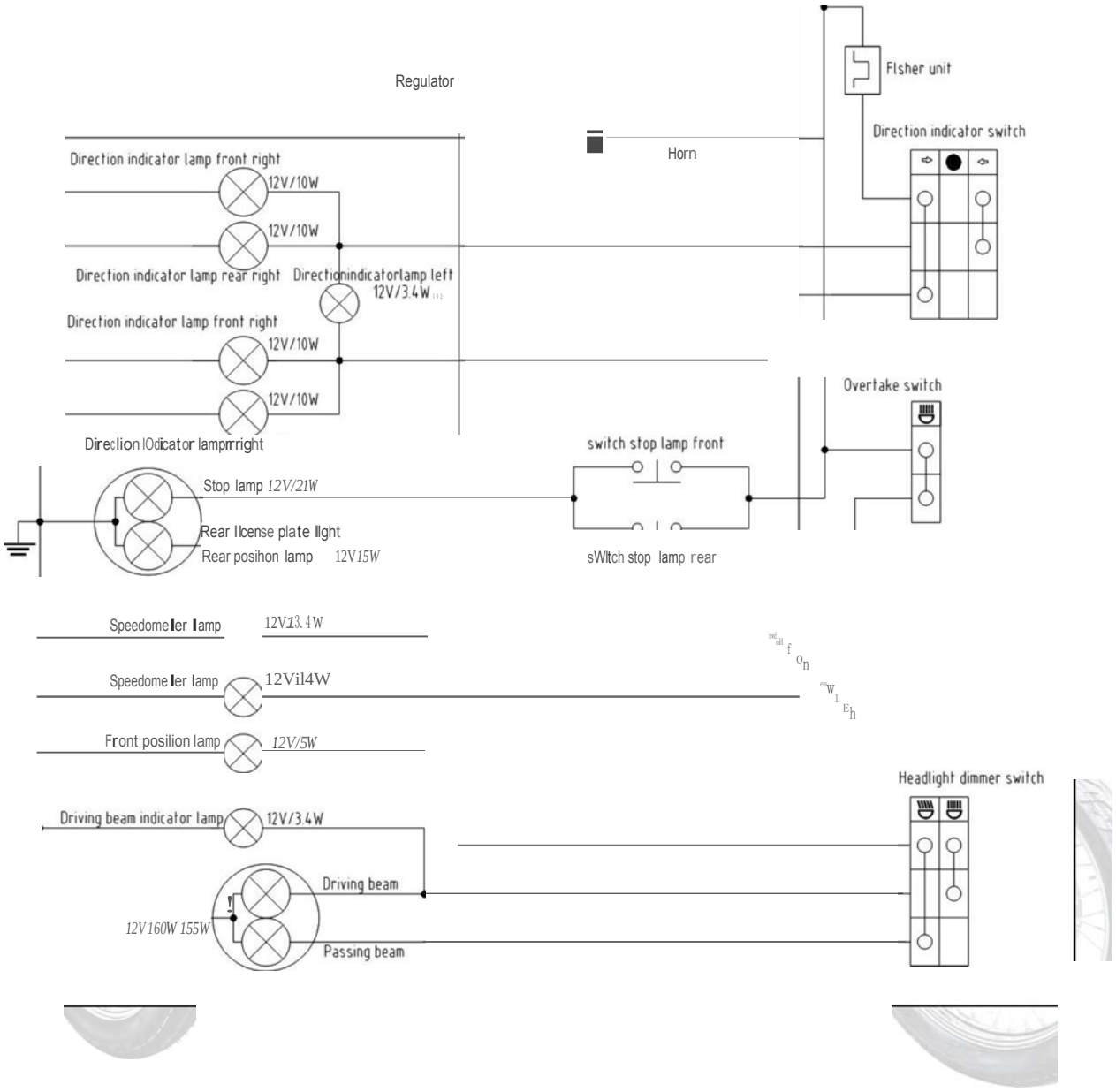

Maintenance of illumination system

1. Turn on ignition switch and flameout switch to check electrical start whether energize.

2. Open battery to check electrode plate whether is burned or electrolyte is little.

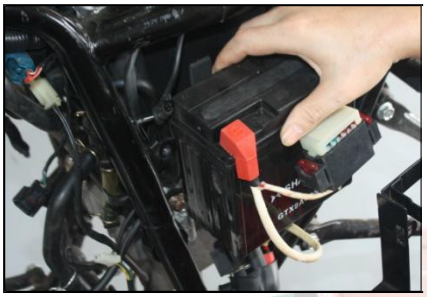

3. Check charging coil of magneto whether is charged.

4. Check rectifier whether is charged.

5. Check fuse whether is burned.

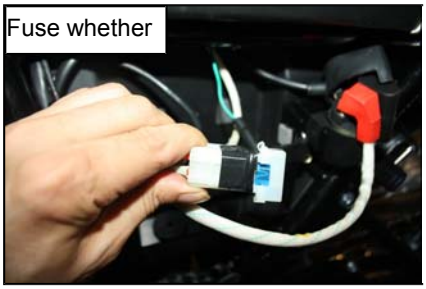

6. Take off headlamp switch socket to check whether there is current

1. Dismantle headlamp bolt to check lamp case whether is damaged.

2. Take out headlamp bulb to check it whether is burned
3. Mount bulb and holder to check headlamp whether it light

4. Take off remote, near lamp of headlamp and overtake lamp wire to check whether there are current or is loose.
5. Check headlamp ground wire whether is loose.

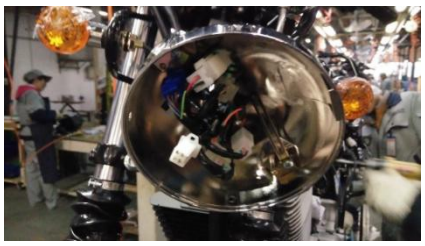

6. Dismantle taillight bolt to check lamp case whether is

7. Check tail lamp and brake lamp socket whether lose

8. Take off ignition switch socket to check whether current

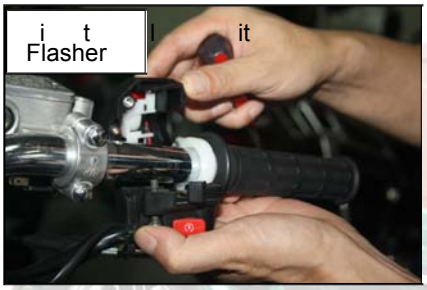

9. Dismantle after brake lamp switch to check it whether

10. Dismantle brake switch before to check it whether lose contact.

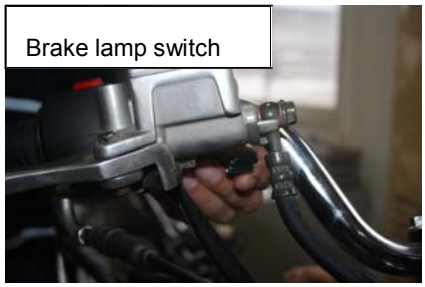

11. Check horn button whether is rusted or lose contact

Adjust velum of electrical horn to check it whether is damaged.

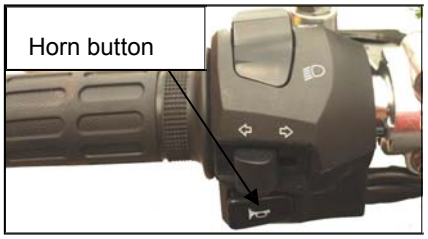

12. Check neutral socket whether contact well.

13. Signal lamp control systems

Check flasher whether is burned or plug is loose.

Turn on signal indication switch left handle to check switch

Check steering signal indication lamp socket whether lose

14. Fuel level sensor

Check fuel sensor failed or float is blocked;

Line poorly plugged, open or short circuit.

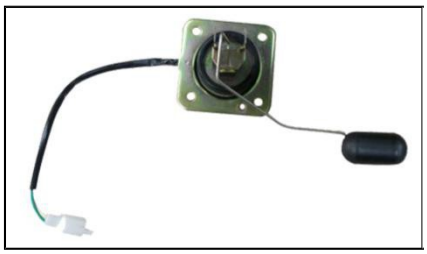

Left combination switch

Right combination switch

Major parts and components

Head lamp

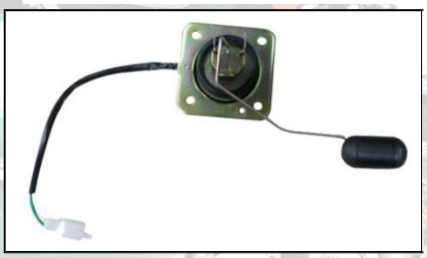

Fuel level sensor

Combined rear position lamp

Horn

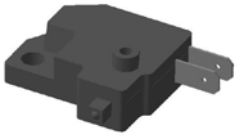

Front brake lamp switch

Major faults diagnosis

Phenomenon	Possible causes	Solutions
● Headlamp does not illuminate; ● Hi-beam does not illuminate ● Low-beam does not illuminate ● Both do not illuminate	● Accumulator voltage too low; ● Corresponding fuse is not connected or is blown; ● Corresponding switch failed; ● Bulb failure; ● Poor plugging of line; ● Related lines of the main cable are open	● Recharge the accumulator; ● Connect the fuse or replace it; ● Repair or replace switch; ● Replace bulb; ● Re-plug; ● Repair or replace main cable.
● Headlamp fails to illuminate reliably	● Poor contacting in fuse, bulb or lines;	● Reconnect the poorly contacted parts;
● Headlamp illumination small	● Accumulator voltage too low; ● Line contact voltage drop too large; ● Headlamp body failed	● Recharge the accumulator; ● Repair the line; ● Replace headlamp
● Position lamp doesn't illuminate: ● Front position lamp doesn't illuminate: ● Basketcar front / rear position lamp ● Tail lamp doesn't illuminate; ● Both do not illuminate	● Corresponding fuse is not connected or is blown; ● Position lamp switch failed; ● Bulb failure; ● Poor contact in lines; ● Related lines of the main cable are open	● Connect the fuse or replace it; ● Repair or replace the left switch; ● Replace bulb; ● Re-plug; ● Repair or replace main cable.
● Brake lamp does not illuminate	● Corresponding fuse is not connected or is blown; ● Front brake lamp switch failed; ● Rear brake lamp switch failed; ● Bulb failure;	● Connect the fuse or replace it; ● Replace front brake lamp switch'; ● Adjust and replace rear brake lamp switch; ● Replace bulb ● Inspection / Repair

	● Line failure	
● Horn does not sound	● Corresponding fuse is not connected or is blown; ● Horn button failed; ● Horn failed; ● Poor contact in lines; ● Related lines of the main cable are open.	● Connect the fuse or replace it; ● Repair or replace the left switch; ● Adjust or replace horn; ● Re-plug; ● Repair or replace main cable.
● Turn signal lamp does not illuminate; ● Front turn lamp does not illuminate; ● Rear turn lamp does not illuminate; ● Both do not illuminate	● Accumulator voltage too low; ● Corresponding fuse is not connected or is blown; ● Left turn lamp switch failed; ● Right turn lamp switch failed; ● Flasher failed; ● Bulb failure; ● Poor contact in lines; ● Related lines of the main cable are open.	● Recharge the accumulator; ● Connect the fuse or replace it; ● Repair or replace the left switch; ● Repair or replace the left switch; ● Replace flasher; ● Replace bulb; ● Re-plug; ● Repair or replace main cable.

16. Electrical starting control system

Overview	Major parts and components
Circuit schematic drawing	Major faults diagnosis

Overview

The information display system displays the dynamic and static information of the complete vehicle on the instrument panel for the driver's safe operation.

The complete vehicle information the XY400B displays include: vehicle speed, engine speed, fuel indicator, Neutral indicator, turn indication, high-beam indication, total / subtotal mileage traveled and EFI Indicator.

Constituting parts and components include:

- Combination meter
- Turn lamp
- Vehicle speed sensor
- Fuel level sensor
- Shift position switch
- Signal switch
- ECU

Circuit schematic drawing

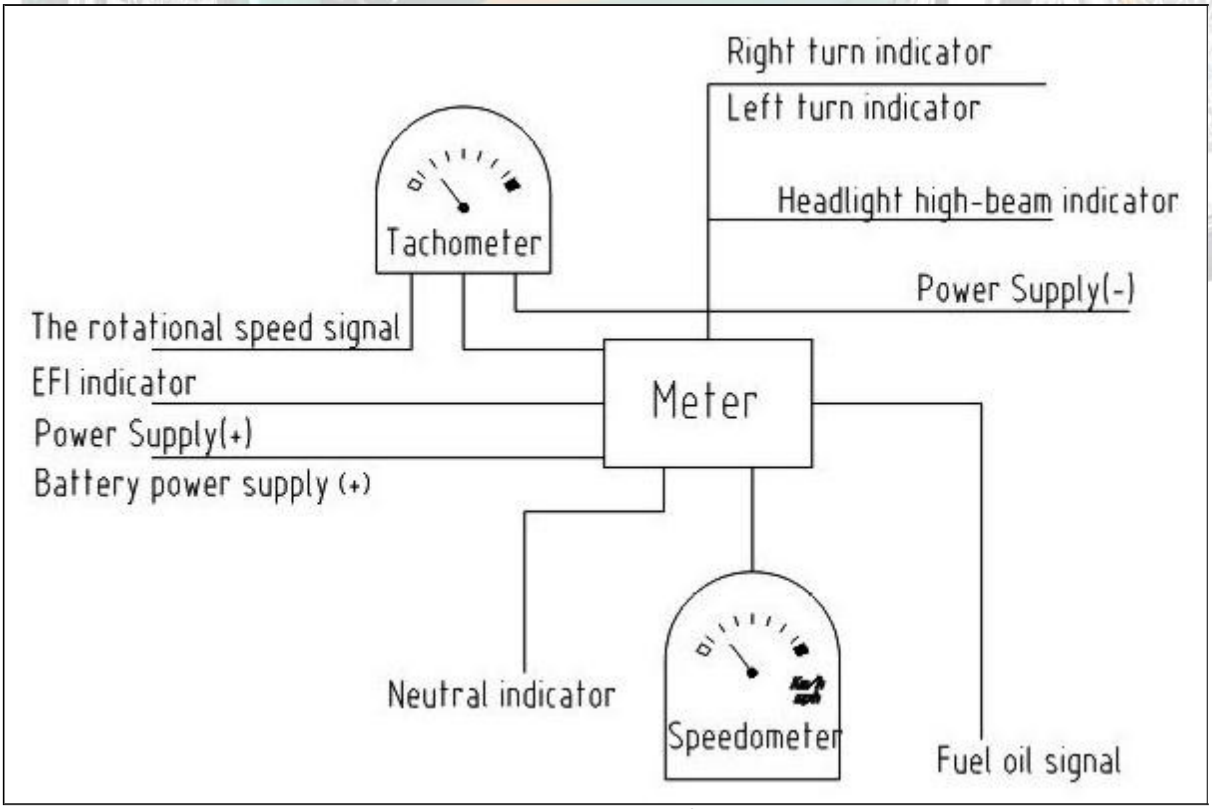

Major parts and components

○Combination meter

1. Outline drawing

2. Line color function corresponding table

S/N	COLOUR	FUNCTION	S/N	COLOUR	FUNCTION
1	Black	Power Supply(+)	8	Black/ Yellow	The rotational speed signal
2	green	Power Supply(-)	9	Yellow / white	Fuel oil signal
3	Brown	Instrument lighting	10	Red	Battery power supply（+）
4	Blue	High-beam light	11	Green / Blue	EFI indicator
5	Light blue	Right turn indicator	12	Yellow	Speed sensor signals
6	Orange	Left turn indicator			
7	Shallow green /red	Neutral warning light			

3. Meter reading and usage

1) Speedometer

Indicate motorcycle speed (Km/h). Do not exceed legal rate-limiting to assure safe riding.

2) Turning indicator light

⇨（R）right turn, twinkle when turn to right(Green).

⇦ （L）left turn, twinkle when turn to left(Green).

3) High-beam light

The light comes on when activating the high-beam light using the control on the left-hand switch.

4) Neutral warning light .

The light comes on when the gear shift lever is in neutral position (no gear engaged).

5) Engine failure warning light

When the ignition key is turned, the engine control unit runs a self-test, the light comes on for a few seconds and then goes off if no fault is found.

If the light comes on while the engine is running, it means that there is an engine or injection system failure.

- Stop and turn off the engine
- Wait a few minutes and restart the engine; if the light comes on again, contact your nearest SWM dealer to have the self-test system checked

6) Fuel reserve warning ligh

When the ignition key is turned, the light comes on for a few seconds and then goes off.

If the light comes on while riding the motorcycle, it means that the fuel has gone into reserve (3 litres) and you need to refuel as soon as possible

7) Odometer

Indicate riding distance (Km).

8) Tachometer

It shows the speed(rpm) of the engine.

9) Trip meter

It shows the mileage of trip in kilometers.

10) Trip meter knob

Indicate distance from Zero, by rotating Zero Knob to the Direction of Arrow can return it to Zero

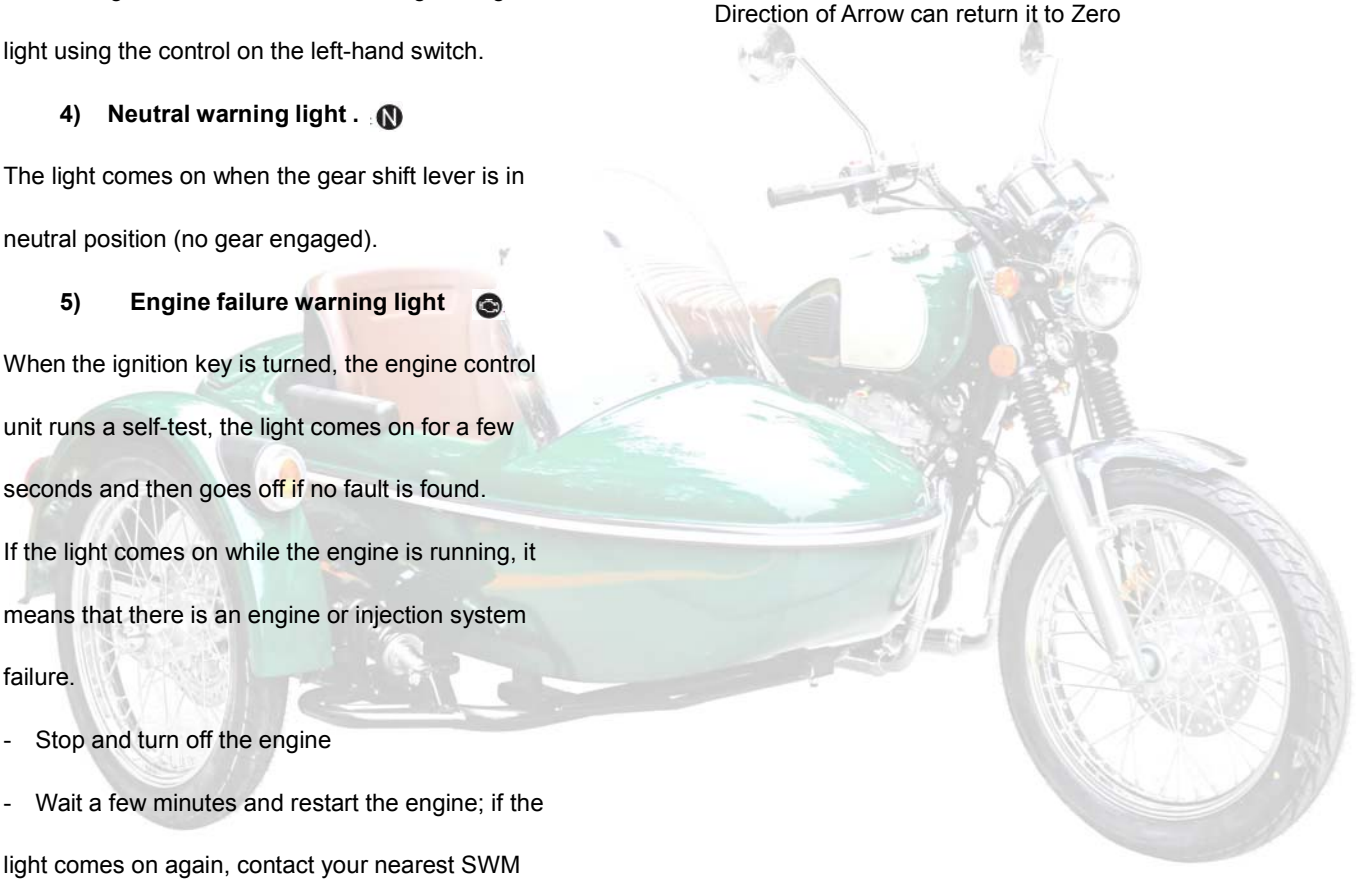

Maintenance of electrical starting control system

1. Turn on ignition switch and flameout switch to check electrical start whether energize.

2. Check fuse whether is burned.

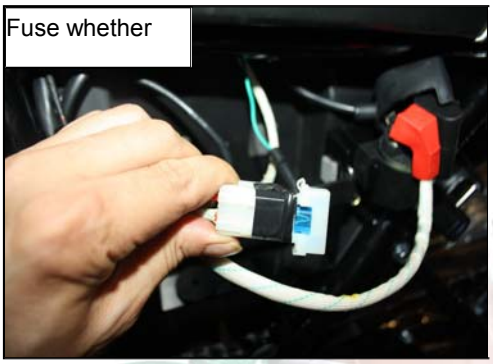

3. Dismantle headlamp holder to check holder whether there is current.

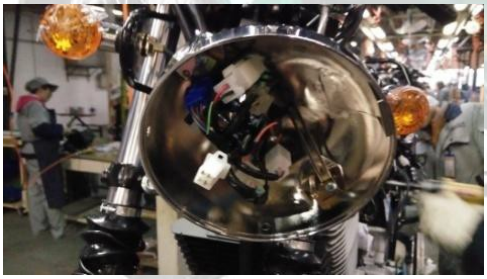

4. Dismantle meter bolt to check it whether is loose or damaged.

5. Dismantle meter bolt and odometer cable to check bolt whether is damaged or loose.

6. Take off meter to check odometer, tachometer and fuel meter whether are damaged.

Major faults diagnosis

Phenomenon	Possible causes	Solutions
● Winker indicator is out of work ● Meter dial illuminator is out of work ● Speedometer is out of work ● Tachometer of generator is out of work	● The winker indicator filament is burnt out ● The meter dial illuminator filament is burnt out ● The speedometer is damaged. ● Tachometer of generator is damaged.	● Replace winker indicator bulb ● Replace meter dial illuminator bul ● Replace speed meter ● Replace tachometer
● There is no mileage increasing indication upon vehicle speed	● Meter failed	● Replace meter
● Speedometer is out of work	● Soft shaft is broken	● Replace speedometer soft shaft assembly
● Engine speed indication failure	● Line poorly plugged or open circuit; ● Meter failed; ● ECU failed;	● Re-plug or repair; ● Replace meter; ● Replace ECU
● Fuel level indication failure: ● No indication while there is fuel; ● Having indication while there is no fuel,	● Fuel sensor failed or float is blocked; ● Meter failed; ● Line poorly plugged, open or short circuit.	● Replace fuel sender; ● Replace meter; ● Re-plug or repair.
● Meter backlight source doesn't illuminate	● Line poorly plugged or open circuit; ● Meter failed	● Re-plug or repair; ● Replace meter;
● Meter can't communicate with ECU;	● Line poorly plugged or open circuit; ● Meter failed; ● ECU failed;	● Re-plug or repair; ● Replace meter. ● Replace ECU

● Turn indicator filament is burnt out ● Headlight high-beam indicator filament is burnt out	● Line poorly plugged or open circuit; ● Meter failed;	● Re-plug or repair; ● Replace meter;
● LCD fails to switch mode	● Meter failed	● Replace meter
● Soft shaft is broken.	●	● Replace speedometer soft shaft

17. Engine management system

System Overview

System Overview	Tools
Major parts and components	Maintenance depending on the malfcode
Circuit schematic drawing	DTC List
Maintenance of Engine management system	Maintenance depending on the performance

Components of system and Operating principle

The Engine Management System(EMS) comprises electronic control unit(ECU), throttle body, Idle speed control valve, fuel pump, fuel injector, ignition coil, O2 sensor, throttle position sensor, T-MAP sensor, cylinder head temperature sensor and so on. Based on the air flow and engine speed, the fuel injector and ignition coil are controlled by ECU to get the optimal combustible mixture of fuel and air and Ignition timing which meet all engine operating conditions. The EMS use sensors to collect parameters such as air flow, temperature of inlet air, cylinder head temperature, atmospheric pressure and the operation state of engine (rpm, load, acceleration and deceleration). All parameters are transferred to the ECU with electronic signal. The ECU output controlling signals after input signal are handled. Through the engine and actuators on the vehicle (ignition coil, fuel injector, Idle speed control valve and so on), the fuel and fire are exactly controlled and corrected with closed loop. For production conformity, corrected fuelling in order to match up to the difference of vehicles due to the inconformity of components.

System composition:

1. Sensor:

- Intake air pressure sensor (load information) intake air temperature and pressure sensors
- Throttle position sensor (load information, load range information, acceleration/deceleration information)
- Engine speed sensor (speed information, crankshaft position)
- Intake air temperature sensor (air density information)
- Oxygen sensor (information of the excess air coefficient is more than 1 or less than 1)

2. Actuator:

- Fuel pump relay,
- Fuel pump
- Fuel injector (fuel supply)
- Ignition coil
- High-tension cord
- Spark plug (ignition)

- Throttle, Idle speed control valve (air intake)

3. Electronic control unit

- ECU

Major parts and components

Fuel pressure regulator

Fuel injector

Throttle body assembly

Electronic control unit(ECU)

Temperature sensor

Throttle sensor

Idle speed control valve

Ignition Coil

Oxygen sensor

Fuel pump assy

Solenoid valve

Circuit schematic drawing

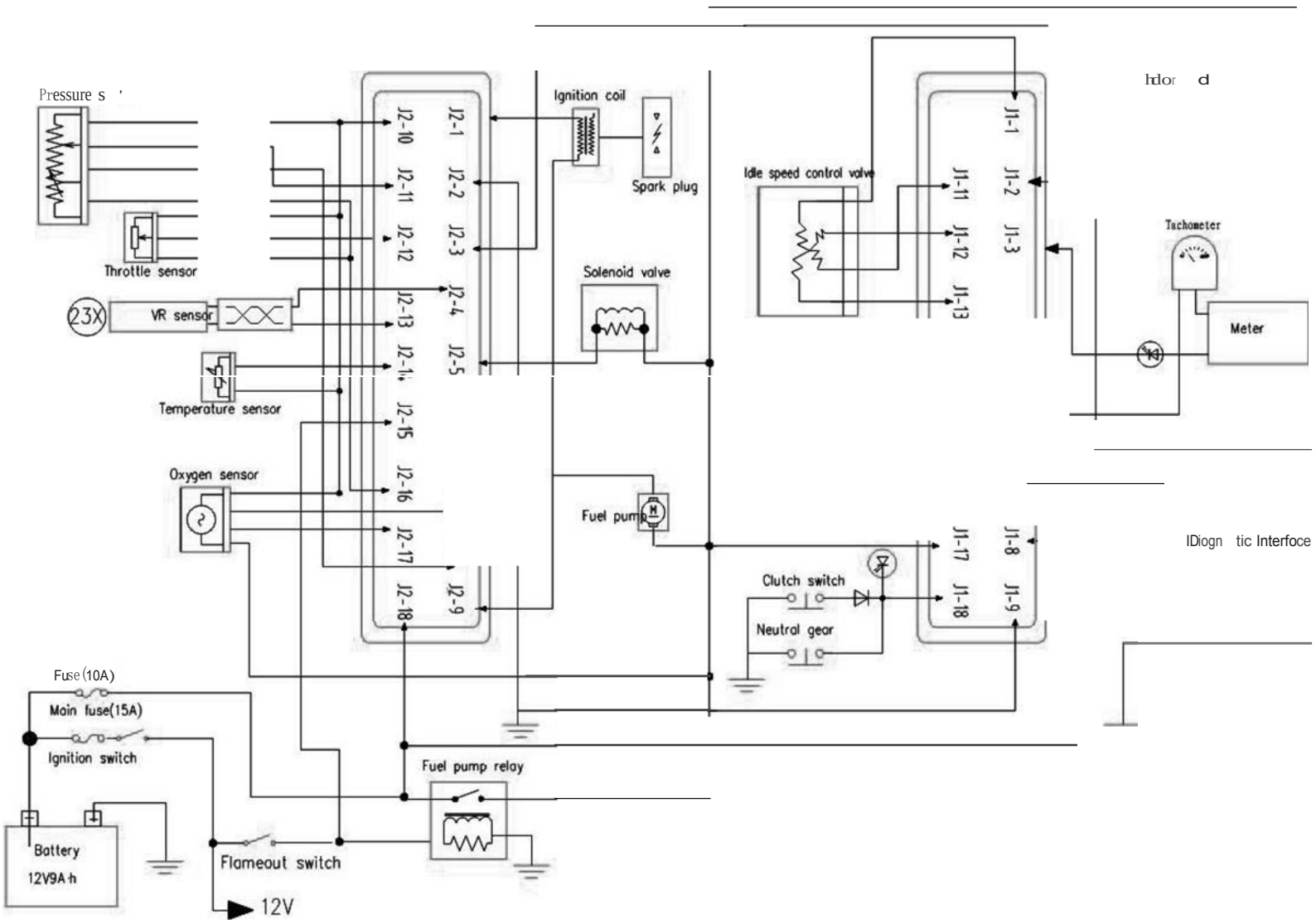

7

ITEM	PIN No.	DESCRIBE	ITEM	PIN No.	DESCRIBE
1	J1-1	IACAHi	1	J2-1	COILA
2	J1-2	MAGNETO CUT RELAY	2	J2-2	GND
3	J1-3	MIL	3	J2-3	KW2000
4	J1-4		4	J2-4	CRANK HI
5	J1-5		5	J2-5	INJA
6	J1-6	TACH	6	J2-6	
7	J1-7	CANLo	7	J2-7	O2AHTR
8	J1-8	CANHi	8	J2-8	IAT_MAT
9	J1-9	GND	9	J2-9	FUEL PUMP RELAY
10	J1-10		10	J2-10	5VRTN
11	J1-11	IACALo	11	J2-11	MAP
12	J1-12	IACBHi	12	J2-12	TPS
13	J1-13	IACBLo	13	J2-13	CRANK LO
14	J1-14		14	J2-14	CLT
15	J1-15		15	J2-15	IGN
16	J1-16	DIAG	16	J2-16	5VREF
17	J1-17	FUEL PUMP RECIRCULATION	17	J2-17	O2A
18	J1-18	PNSW	18	J2-18	VBATT

Maintenance of Engine management system

Because of the EFI, there are many possibilities for the engine issues. In other word, one issue may be caused by the mechanical problem or the EFI components. And the diagnostic tools cannot 100% indicate the root cause. So this manual shows the way to dig out the root cause with the help of the diagnostic tools.

Maintenance matters needing attention

1) Do not disassemble the components arbitrarily. It may damage the components if the warter or the oil seep into the parts.
2) Turn the ignition off, before connect or disconnect the connectors.
3) Make sure the temperature of the ECU is below 80℃.

4) The fuel pressure is much high (about 250kPa), so please do not disassemble the fuel pipe arbitrariliy. If have to, pleae release the pressure at first, and make sure the operation is dilivered in the ventilated environment by the the professional mantenance persons.

5) When disassmeble the fuel pump from the pump, make sure the power is off. Or it may casue the fire.

6) The fuel pump cannot work in air or water, it will shorten the service life. And the positive and negative connecters cannot be exchanged.

7) The ignition system check only could be delivered when it is nessasary. When check the spark plug out of the engine, if start the engine, please make sure the throttle is closed. Or too much unburned gasoline coming to the catalyst may damage the catalyst.

8) The idle speed is adjusted by the ECU. The idle pintle is not alowed to adjust.

9) The Positive and Negative of the battery cannot be reversed. It may damage the EFI components.

10) It is forbidden to remove the battery when the eninge is running.

11) Cannot messure the signal by pierce the harness.

Tools

1) Multimeter: messure the voltage, the resistance and the harness connection.
2) Diagnostic tool: reading the malfcode, and engine parameters.
3) Oil pressure garge: messure the fuel pressure.
4) Cylinder pressure garge: messure the pressure garge.

Maintenance depending on the malfcode.

Description

1) If the issure cannot repeat, the issure analysis may be wrong.
2) The multimeter below means the digital type. Pointer-type is forbidden.
3) If the malfcode shows the voltage is low, it means maybe the wire is short to ground. If the malfcode shows the voltage is high, it means maybe the wire is short to battery. If the malfcode shows the components signal abnormal, it means the wire is open or short to other wires.

Diagnostic help：

1) If the malfcode shows again after clearence, check whether the connector is connected well.
2) Do not ignore the affect of the engine maintenance situation, the cylinder pressure, and the mechanical ignition timing.
3) Change another ECU to do the test. If the malfcode disappears, the root cause is the ECU. If the malfcode is still there, then use the old ECU to do the test.

DTC List

System or Component	DTC Number	DTC Description	Related Calibration
Manifold Absolute Pressure Sensor (MAP)	P0107	MAP Circuit Low Voltage or Open	KsDGDM_MAP_ShortLow
	P0108	MAP Circuit High Voltage	KsDGDM_MAP_ShortHigh
Intake Air Temperature Sensor (IAT)	P0112	IAT Circuit Low Voltage	KsDGDM_IAT_ShortLow
	P0113	IAT Circuit High Voltage or Open	KsDGDM_IAT_ShortHigh
Coolant/Oil Sensor	P0117	Coolant/Oil Temperature Sensor Circuit Low Voltage	KsDGDM_CoolantShortLow
	P0118	Coolant/Oil Temperature Sensor Circuit High Voltage or Open	KsDGDM_CoolantShortHigh
Throttle Position Sensor (TPS)	P0122	TPS Circuit Low Voltage or Open	KsDGDM_TPS_ShortLow
	P0123	TPS Circuit High Voltage	KsDGDM_TPS_ShortHigh
Oxygen Sensor	P0131	O2S 1 Circuit Low Voltage	KsDGDM_O2_1_ShortLow
	P0132	O2S 1 Circuit High Voltage	KsDGDM_O2_1_ShortHigh
Oxygen Sensor Heater	P0032	O2S Heater Circuit High Voltage	KsDGDM_O2_1_HeaterShortHigh
	P0031	O2S Heater Circuit Low Voltage	KsDGDM_O2_1_HeaterShortLow
Fuel Injector	P0201	Injector 1 Circuit Malfunction	KsDGDM_INJ_CYL_A_Fault
	P0202	Injector 2 Circuit Malfunction	KsDGDM_INJ_CYL_B_Fault
Fuel Pump Relay (FPR)	P0230	FPR Coil Circuit Low Voltage or Open FPR	KsDGDM_FPP_CircuitShortLow
	P0232	FPR Coil Circuit High Voltage FPR	KsDGDM_FPP_CircuitShortHigh
Crankshaft Position Sensor (CKP)	P0336	CKP Sensor Noisy Signal	KsDGDM_CrankNoisySignal
	P0337	CKP Sensor No Signal	KsDGDM_CrankNoSignal
Ignition Coil	P0351	Cylinder 1 Ignition Coil Malfunction	KsDGDM_EST_A_Fault
	P0352	Cylinder 2 Ignition Coil Malfunction	KsDGDM_EST_B_Fault
Idle Control System	P0505	Idle Speed Control Error	KsDGDM_IdleControl
System Voltage	P0562	System Voltage Low	KsDGDM_SysVoltLow
	P0563	System Voltage High	KsDGDM_SysVoltHigh
MIL	P0650	MIL Circuit Malfunction	KsDGDM_MIL_Circuit
Tachometer	P1693	Tachometer Circuit Low Voltage	KsDGDM_TAC_Circuit_Low
	P1694	Tachometer Circuit High Voltage	KsDGDM_TAC_Circuit_High

Malfcode：P0107

Information：MAP Circuit Low Voltage or Open

ITEM	OPERATION	RESULT	NEXT STEP
1	Connect the diagnostic tool, and ignition on.		Next
2	Check the data of 'BARO'. Make sure whether it is about 100kPa (depending on where you are)	Yes	Step 5
		No	Next
3	Remove the connector, and use the multimeter to check whether the voltage between pin B and D is about 5V.	Yes	Setp 5
		No	Next
4	Check whether the following pins is short to ground: J2-11, J2-10, J2-16 of the ECU and pin A, D, B of the connector.	Yes	Check the harness
		No	Next
5	Crank the engine to stay at idle. Check whether the MAP is abou 30-50kPa. Then go to WOT, check whether the MAP goes to about 90kPa.	Yes	Diagnotic help
		No	Change the sensor

Malfcode：P0108

Information：MAP Circuit High Voltage

ITEM	OPERATION	RESULT	NEXT STEP
1	Connect the diagnostic tool, and ignition on.		Next
2	Check the data of 'BARO'. Make sure whether it is about 100kPa (depending on where you are)	Yes	Step 5
		No	next
3	Remove the connector, and use the multimeter to check whether the voltage between pin B and D is about 5V.	Yes	Setp 5
		No	Next
4	Check whether the following pins is short to battery: J2-11, J2-10, J2-16 of the ECU and pin A, D, B of the connector.	Yes	Check the harness
		No	Next
5	Crank the engine to stay at idle. Check whether the MAP is abou 30-50kPa. Then go to WOT, check whether the MAP goes to about 90kPa.	Yes	Diagnotic help
		No	Change the sensor

Malfcode：P0112

Information：IAT Circuit Low Voltage

ITEM	OPERATION	RESULT	NEXT STEP
1	Connect the diagnostic tool, and ignition on.		Next
2	check whether the data of 'intake air temperature' equals to the real intake air temperature.	Yes	Setp 5
		No	Next
3	Remove the connector, and use the multimeter to check whether the resistance between pin B and D is reasonable according to the temperature.	Yes	Step 5
		No	Next
4	Remove the connector and check whether the voltage between pin B and D is about 5V.	Yes	Next
		No	Check harness
5	Check whether the following pins are short battery: J2-8, J2-10 of the ECU and pin C, D of the connector.	Yes	Change the harness
		No	Next
6	Crank the engine and stay idle. Check whether the 'intake air temperature' goes up when the engine temperature goes up.	Yes	Help
		No	Change the sensor.

Malfcode：P0113

Information：IAT Circuit High Voltage

ITEM	OPERATION	RESULT	NEXT STEP
1	Connect the diagnostic tool, and ignition on.		Next
2	check whether the data of 'intake air temperature' equals to the real intake air temperature.	Yes	Setp 5
		No	Next
3	Remove the connector, and use the multimeter to check whether the resistance between pin B and D is reasonable according to the temperature.	Yes	Step 5
		No	Next
4	Remove the connector and check whether the voltage between pin B and D is about 5V.	Yes	Next
		No	Check harness
5	Check whether the following pins are short to ground or open: J2-8, J2-10 of the ECU and pin C, D of the connector.	Yes	Change the harness
		No	Next
6	Crank the engine and stay idle. Check whether the 'intake air temperature' goes up when the engine temperature goes up.	Yes	Help
		No	Change the sensor.

Malfcode：P0117

Information：Coolant/Oil Temperature Sensor Circuit Low Voltage

ITEM	OPERATION	RESULT	NEXT STEP
1	Connect the diagnostic tool, and ignition on.		Next
2	check whether the data of 'engine temperature' equals to the real temperature.	Yes	Step 5
		No	Next
3	Remove the connector and use the multimeter to check whether the resistance between pin A and C of the sensor is reasonable according to the temperature.	Yes	Step 5
		No	Next
4	Use the multimeter to measure whether the voltage between A and C is about 5V.	Yes	Next
		No	Check the harness
5	check whether the following pins are short to gound or open: J2-10, J2-14 of the ECU and pin C and D of the sensor.	Yes	Harness issue
		No	Next
6	crank the engine and stay idle. Check whether the 'engine temperture' goes high when engine get warm.	Yes	Help
		No	Change the sensor

Malfcode：P0118

Information：Coolant/Oil Temperature Sensor Circuit High Voltage or Open

ITEM	OPERATION	RESULT	NEXT STEP
1	Connect the diagnostic tool, and ignition on.		Next
2	check whether the data of 'engine temperature' equals to the real temperature.	Yes	Step 5
		No	Next
3	Remove the connector and use the multimeter to check whether the resistance between pin A and C of the sensor is reasonable according to the temperature.	Yes	Step 5
		No	Next
4	Use the multimeter to measure whether the voltage between A and C is about 5V.	Yes	Next
		No	Check the harness
5	check whether the following pins are short to battery or open: J2-10, J2-14 of the ECU and pin C and D of the sensor.	Yes	Harness issue
		No	Next
6	crank the engine and stay idle. Check whether the 'engine temperture' goes high when engine get warm.	Yes	Help
		No	Change the sensor

Malfcode：P0122

Information：TPS Circuit Low Voltage or Open

ITEM	OPERATION	RESULT	NEXT STEP
1	Connect the diagnostic tool, and ignition on.		Next
2	Check whether the data of 'Throttle opening' is bettwen 0%-1%.	Yes	Step 5
		No	Next
3	Open the throttle to 100% slowly, check whether the data of 'throttle opening' goes to between 90%-100%.	Yes	Step 5
		No	Next
4	Repeat Step 3, check whether the data jumps when open the throttle slowly.	Yes	Change the sensor
		No	Next
5	Remove the connector and check whether the following pins are short to gound or open: J2-12, J2-16 of ECU and pin A and C of the sensor.	Yes	Harness issue
		No	Next
6	Use multimeter to check whether the voltage between pin A and B is about 5V.	Yes	Help
		No	Step 5

Malfcode：P0123

Information：TPS Circuit High Voltage

ITEM	OPERATION	RESULT	NEXT STEP
1	Connect the diagnostic tool, and ignition on.		Next
2	Check whether the data of 'Throttle opening' is between 0%-1%.	Yes	Step 5
		No	Next
3	Open the throttle to 100% slowly, check whether the data of 'throttle opening' goes to between 90%-100%.	Yes	Step 5
		No	Next
4	Repeat Step 3, check whether the data jumps when open the throttle slowly	Yes	Change the sensor
		No	Next
5	Remove the connector and check whether the following pins are short to battery: J2-12, J2-16 of ECU and pin A and C of the sensor.	Yes	Harness issue
		No	Next
6	Use multimeter to check whether the voltage between pin A and B is about 5V.	Yes	Help
		No	Step 5

Malfcode：P0131/P0132

Information：O2S 1 Circuit Low/High Voltage

ITEM	OPERATION	RESULT	NEXT STEP
1	Connect the diagnostic tool, and ignition on.		Next
2	Use multimeter to check whether the connection between pin B of the oxygen sensor and pin J2-17 of the ECU is open, and whether the pin B of sensor is short to pin A.	Yes	Harness issue
		No	Next
3	Crank the engine and stay idle. Whent the engine gets warm, use multimeter to check whether the voltage between pin A and B keeps jumping between 100-900mV.	Yes	Help
		No	Next
4	A、Emission pipe: block/leakage or not. B、Injector: leakage or not C、Fuel pressure too big or not D、 Valve clearance is to small or not	Yes	Engine maintenance
		No	Change sensor

Malfcode：P0201

Information：Injector 1 Circuit Malfunction

ITEM	OPERATION	RESULT	NEXT STEP
1	Connect the diagnostic tool, and ignition on.		Next
2	Remove the conneter of injecor 1, use multimeter to check whether the voltage of Pin A is about 12V.	Yes	Step 4
		No	Next
3	Check whether the connection between pin A and the main power relay is short to gound or open.	Yes	Harness issue
		No	Next
4	Use multimeter to measure whether the resistance between pin A and B of the injecotr is about 10-14 Ω @ 20℃	No	Change the injector
		Yes	Next
5	Use the multimeter to check whether the voltage of Pin B is about 12V.	Yes	Help
		No	Next
6	Check whether the connection between pin B of the injector and J2-05 of the ECU is open or short to battery/ground.	Yes	Harness issue
		No	Help

Malfcode：P0230/P0232

Information：FPR Coil Circuit Low/High Voltage or Open

ITEM	OPERATION	RESULT	NEXT STEP
1	Connect the diagnostic tool, and ignition off		next
2	Wait about 30s. Remove the fuel pump realy, ignition on. Check whether voltage of the relay feeder ear is about 12V	Yes	Change the pump
		No	Next
3	Check whether the feeder ear is short to ground or open.	Yes	Harness issue
		No	Help

Malfcode：P0351

Information：Cylinder 1 Ignition Coil Malfunction

ITEM	OPERATION	RESULT	NEXT STEP
1	Connect the diagnostic tool, and ignition on.		next
2	Remove the connector and check whether the voltage of pin + is about 12V.	Yes	Step 4
		No	Next
3	Check whether the connection of the pin + and main power relay is open or short to ground.	Yes	Harness issue
		No	Next
4	Use multimeter to check wheter the resistance of the two coil pins is 0.5-0.65Ω @20℃	Yes	Change coil
		No	Next
5	Use multimeter to check whether the voltage of pin B is about 12V.	Yes	Help
		No	Next
6	Check whether the connection of pin 2 of the coil and J2-01 of ECU is open or shor to battery/ground.	Yes	Harness issue
		No	Help

Malfcode：P0505

Information：Idle Speed Control Error

ITEM	OPERATION	RESULT	NEXT STEP
1	Connect the diagnostic tool, and ignition off		next
2	Remove the connector. Use multimeter to check whether the resistance between pin A and pin D, pin B and pin C is about 53±5.3Ω	Yes	Next
		No	Change stepper motor
3	Check whether the 4 wires are short to battery/ground or open.	Yes	Harness issue
		No	Help

Maintenance depending on the performance.

Before issue analysis, please check:

1) The MIL works well.

2) Clear the history malfcode.

3) When the malfcode comes again, note the condictions.

Check the appearance

1) Whether there is leakage of the fuel pipe or not.

2) Whether there is block/leakage or damage of the intake pipe.

3) Ageing level of the high-voltage cable.

4) Whether the ground connection is strong enough.

5) All the connectors connected well.

Note: if any item above exists, please do the fix it at first before issue analysis.

Diagnostic Help：

1) Make sure there is no any issue record of the engine.

2) Make sure the issue could repeat.

3) Have checked follow the instructions above and no cause found.

4) Do not ignore the maintenance situation, cylinder pressure, mechanical timing and fuel quality.

5) Change the ECU and repeat the test, if the issue is gone, then the root cause is the ECU. Or change the old one back to check the root cause.

ITEM	OPERATION	RESULT	NEXT STEP
Engine cannot start	Check whether the voltage of the battery is around 8-12V.	Yes	Next
		No	Change the battery.
	Crank the engine, and check whether the voltage is above 8V.	Yes	Next
		No	Change the battery.
	Check whether the start motor working well or not.	Yes	Next
		No	Change the start motor.
	If the issue only occurs in winter, check the oil and gear box oil.	Yes	Change the oil
		No	Next
	Check whether the engine rotation resistance is too big or not.	Yes	Check the enigne
		No	Help
	Check wether the fuel pump pressure is about 250kPa at idle.	Yes	Next
		No	Check the pump.
	Check whether the 'RMP' data on the diagnostic tool shows the real engine RPM.	Yes	Next
		No	Check the crank sensor.
	Pull out the spark plug, check whether the spark over is normal.	Yes	Next
		No	Check the ignition system
	Check whether the cylinder pressure is normal.	Yes	Engine is good.
		No	Check the engine
Start Difficult	Check wether the fuel pump pressure is about 250kPa at idle.	Yes	Next
		No	Check the pump.
	Pull out the spark plug, check whether the spark over is normal.	Yes	Next
		No	Check the ignition system
	Remove the connector of the engine temperature sensor, and check whether the engine start well.	Yes	Check the engine temperature sensor
		No	Next
	With a little bigger throttle, check whether the engine starts well.	Yes	Clean the throttle body and bypass channel.
		No	Next
	Pull out the injector, and crank the engine. Check whether the injection is normal.	Yes	Next
		No	Clean or change the injector.

	Pull out the spark plug, check whether it is wet or not	Yes	dry the plug and combustion chamber.
		No	Next
	Check whether the cylinder pressure is normal or not	Yes	Engine is good
		No	Check the engine
Unstable idle	Check whether the air filter is blocked and whether the intake pipe leaks.	Yes	Intake system maintenance
		No	Next
	Whether there is carbon deposit at the throttle body and bypass channel.	Yes	Clean the TB
		No	Next
	Check whether the IACV works well	Yes	Next
		No	Check the IACV
	Check whether the fuel pressure is about 250kPa.	Yes	Next
		No	Check the pump
	Check whether the injector is blocked.	Yes	Clean or change the injector
		No	Next
	Make sue using the right type spark plug	Yes	Next
		No	Change the spark plug
	Check whether the cylinder pressure is normal	Yes	Next
		No	Check the engine
	Remove the engine temperature sensor, and check whether the engine works well	Yes	Change the senor
		No	Next
	Remove the TPS, check whether the engine works well	Yes	Change the sensor
		No	Help
High idle	Check whether the throttle cable is stuck	Yes	Adjust the cable
		No	Next
	Check whether the idle pimple has been adjusted	Yes	Change the TB
		No	Next
	Check whether the is any leakage of the intake pipe.	Yes	Maintenance
		No	Next
	Check whether the IACV works well	Yes	Next

		No	Change IACV
	Remove the engine temperature sensor and check whether the engine works well	Yes	Help
		No	Change the sensor
Acceleration gets worse	Check whether the air filter is blocked and whether the intake pipe leaks.	Yes	Intake system maintenance
		No	Next
	Check whether the fuel pressure is about 250kPa.	Yes	Next
		No	Check the pump
	Pull out the spark plug, check whether it is wet or not	Yes	dry the plug and combustion chamber.
		No	Next
	Check whether the TMAP, TPS and the connections works well.	Yes	Next
		No	Change the sensor or harness maintenance
	Check whether the injector is blocked.	Yes	Clean or change the injector
		No	Next
	Check the typ and the clearance of the spark plug.	Yes	Next
		No	Change the sprk plug
	Check whether the cylinder pressure is normal	Yes	Next
		No	Check the engine
	Check whether the exhaust pipe is blocked or not	No	help
		Yes	maintenance
Backfire	Pull out the spark plug, check whether the spark over is normal.	Yes	Next
		No	Check the ignition system
	Check whether the timing is right	Yes	Next
		No	Adjust the timing
	Check whether there is leakage of the valve	Yes	Adjust the valve
		No	Next
	Check whether the injector is blocked.	Yes	Clean or change the injector
		No	Next
	Check whether the oxygen sensor works well	Yes	Help
		No	Change the sensor

Miss fire	Pull out the spark plug, check whether the spark over is normal.	Yes	Next
		No	Check the ignition system
	Check whether the timing is right	Yes	Next
		No	Adjust the timing
	Check the typ and the clearance of the spark plug.	Yes	Help
		No	Change the spark plug
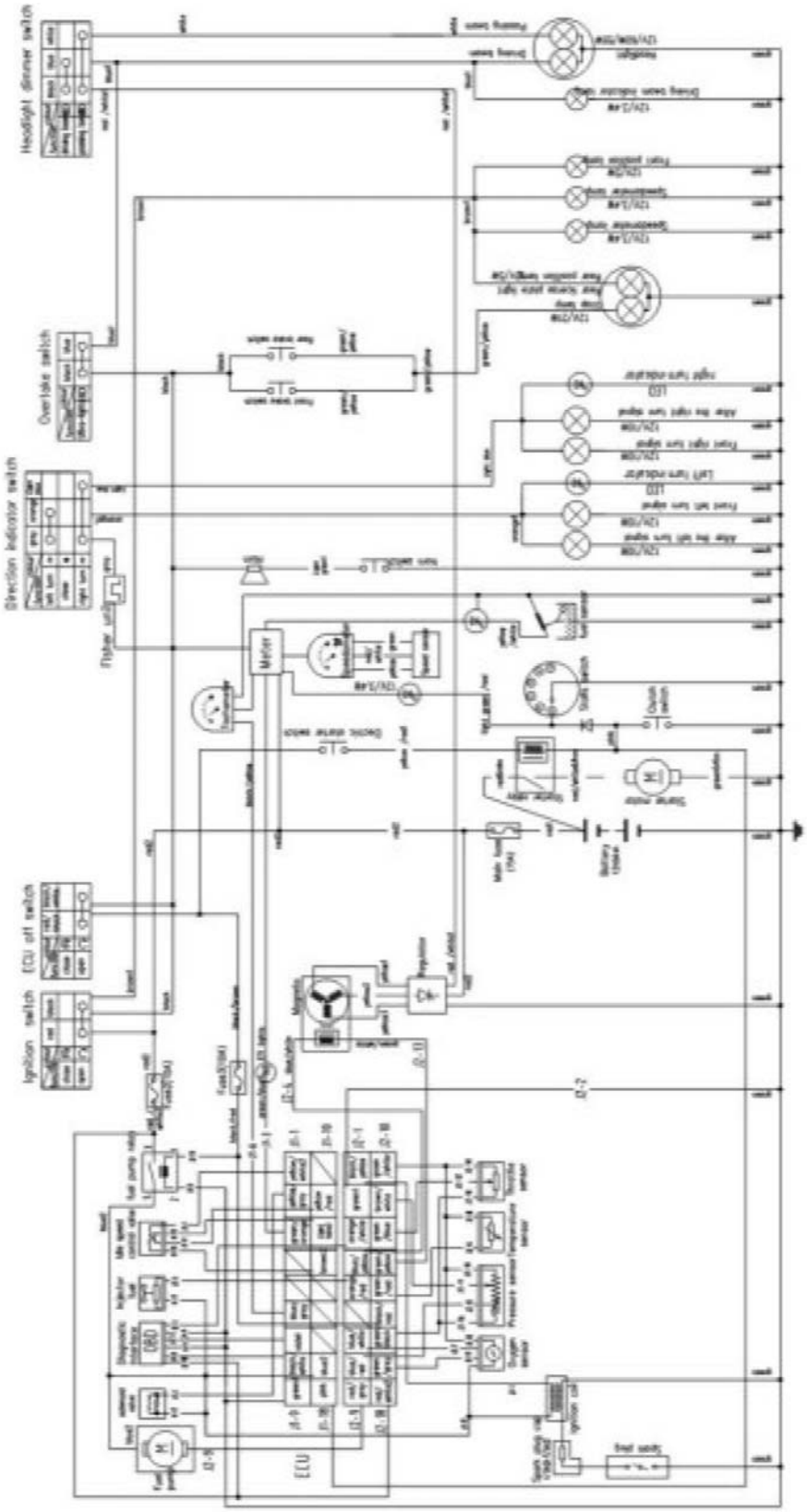
18. Electrical System Diagram