# Foreword

With the ever increasing varieties of motorcycles, new structures and new techniques have increasingly been applied. To help SHINERAY users and maintenance personnel better understand the maintenance, adjustment and repair techniques of XY400-2A motorcycle, we prepared this maintenance manual. This manual is expected to facilitate the SHINERAY users and maintenance personnel and provide technical guidance for them.

The masterstroke of the manual is the XY400-2A motorcycle, and the contents in Chapter 1-Chapter 3 are applicable to the adjustment of various parts of the motorcycle. Chapter 4-18 describes various constituting parts of the motorcycle respectively. Chapter 19 contains the electrical system diagram.

The standard maintenance procedures, maintenance precautions and general maintenance knowledge are not covered in this manual. Any user or maintenance personnel who needs the above information may refer to the related materials

All materials, charts and various data, as well as performance indices referenced herein, are for the latest model in our product family at the date this manual is printed. SHINERAY Co., Ltd. Shall have the right to, at any time; amend this manual without prior notice. The copyright of all parts of this manual belongs to China SHINERAY Co., Ltd. and no units or individuals are allowed to reprint it the without consent of our company.

We hope you will enjoy the comfort and pleasure it brings to you during your driving!

# Contents


| | | |
|---|---|---|
| Overview | 1. Overview | 1-12 |
| | 2. Lubrication system | 13-20 |
| | 3. Inspection and adjustment | 21-39 |
| Engine | 4. Fuel system | 40-44 |
| | 5. Removal and installation of engine | 45-49 |
| | 6. Cylinder head, cylinder and piston | 50-63 |
| | 7. Clutch and Right crankcase cover | 64-74 |
| | 8. Magneto and starting system | 75-83 |
| | 9. Crankcase, crankshaft and Shift mechanism | 84-99 |
| Vehicle body | 10. Frame and exhaust system | 100-107 |
| | 11. Front wheel, front overhang and steering stem | 108-125 |
| | 12. Rear wheel and rear overhang | 126-134 |
| Electrical system | 13. General remarks of electrical system | 135-136 |
| | 14. Power supply system | 137-139 |
| | 15. Starting system | 140-143 |
| | 16. Illumination signal system | 144-150 |
| | 17. Electrical starting control system | 151-156 |
| | 18. Engine management system | 157-173 |
| | 19. Electrical System Diagram | 174 |

# 1. Overview

| | |
|---|---|
| Engine Number Position | Bar Tool |
| About Motorcycle Maintenance | Maintenance Period Table |
| Technical Data of Main Performance | Symbol Descriptions |
| Standard Torque Values | |

## Engine Number Position

Photo of Complete Vehicle:

Frame Number Position:

Engine Number Position

**Maintenance Precautions**

1. Whenever reassembling after being disassembled, replace new washers, sealing members, etc.

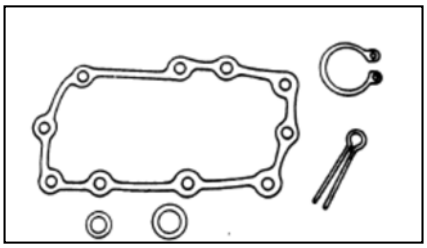

2. While fastening bolts or nuts, proceed in diagonal crossing sequence to gradually screw down to the required torque for 2 to 3 tries.

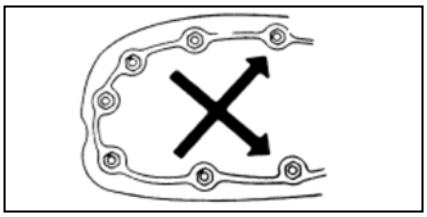

3. After being disassembled, the parts and components should be cleaned before being inspected and measured

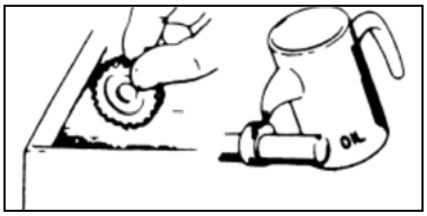


To clean the spare parts, use only the cleaning fluid that is incombustible or has high ignition point.

Before reassembling, apply the specified lubricating oil to the sliding surface of the parts and components.

After reassembling, check whether all the spare parts are mounted properly by means of turning, moving and operating them.

4. To disassemble and assemble a motorcycle, special service tools (SST) and general-purpose tools must be used in accordance with relevant regulations.

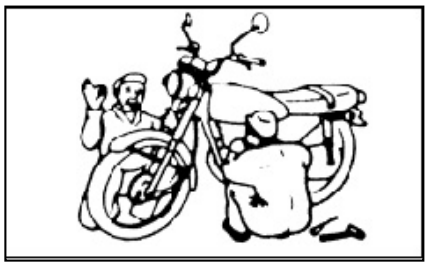

5. The specified or equivalent lubricating grease (oil) must be applied to or refilled into the specified locations.

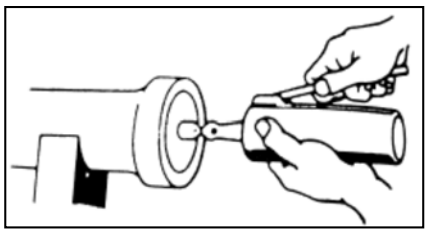

6. When 2 or more persons are carrying out the operation, they shall work with each other and pay attention to

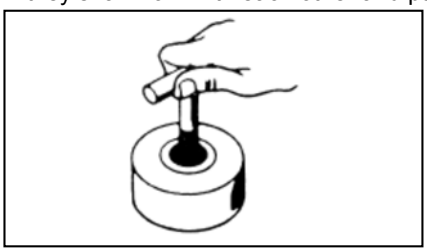

7. Before operating, always remove the negative (-) end of the battery first and take care to prevent the wrench or the like from touching the frame. After operating, reconfirm all the connections, fixings and junctions. If the battery is already removed, connect the positive (+)

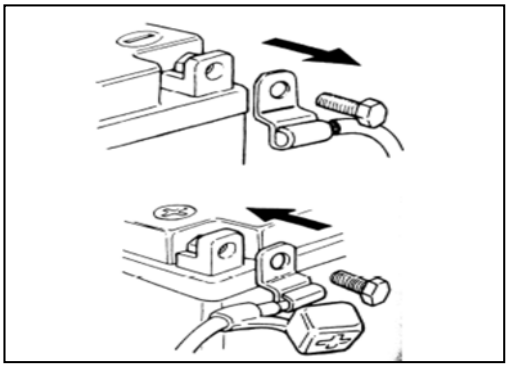

8. In case the fuse is blown, check for the causes and, after being repaired, replace corresponding fuse as per the specified capacity.

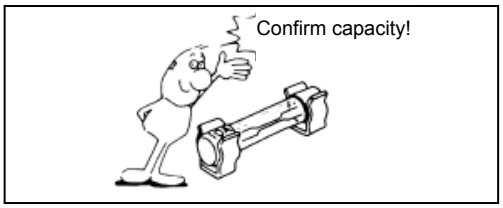


9. The caps must be securely put on the terminals after the operation is complete

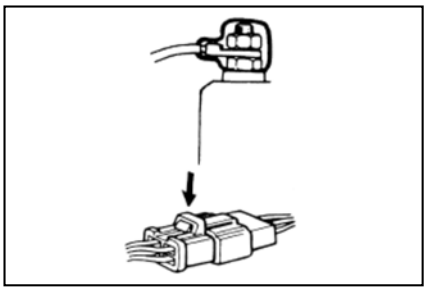

10. While disassembling a connector joints with lock, release the lock before proceeding with operation.

While disassembling a connector joints, hold the connector body without pulling the wire harness.

Before connecting the connector, the terminals shall be free from breaking or bending. Make sure the terminals are not too long or are falling off.

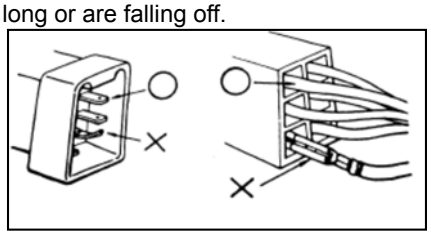

The connector shall be fully inserted in place.

For a connector with lock, confirm whether the lock is completely fixed.

Make sure the harness is not falling off

Make sure the plastic jacket of the connector is securely c ff.

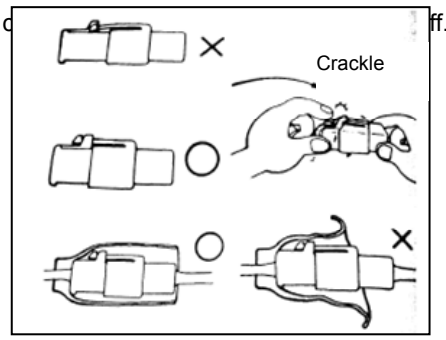


11. Before connecting a connector, make sure the sleeve is not broken and the opening of the intermediate terminal is not too large

The joint shall be fully inserted in place.

Make sure the plastic jacket is housing the terminal completely. The opening of the plastic jacket shall not face up

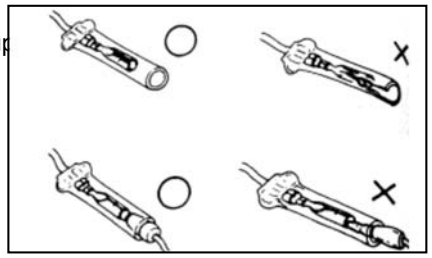

12. The harness fixing strap shall firmly button the specified position on the frame.

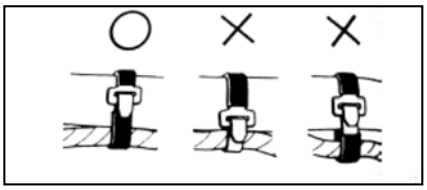

13. The clamp shall reliably bite the wire harness

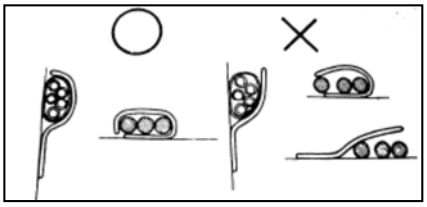

In case of a welded clamp, it shall not bite the wire harness towards the weld mark

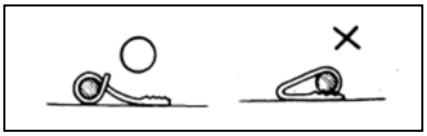

The wire harness shall be clamped at the position without contacting a rotating part or a removing element.

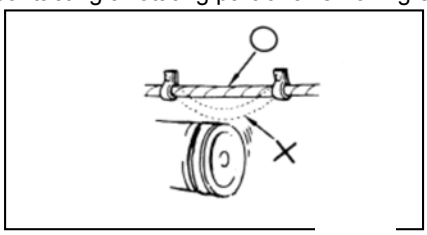

The wire harness shall be clamped at the position without contacting a part that generates high temperature.

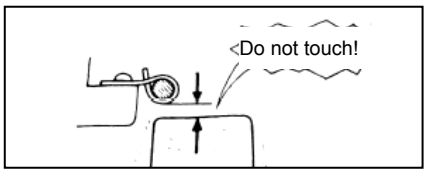


The wire harness shall be clamped at the position without contacting the edge or sharp corners of the vehicle body.

The wire harness shall be incapable of passing through the position contacting a bolt, a screw head or any front part.

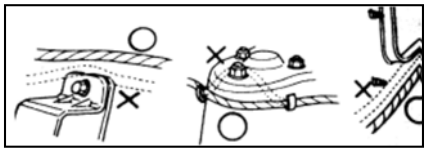

The wire harness shall not be slackened or be forcibly pulled.

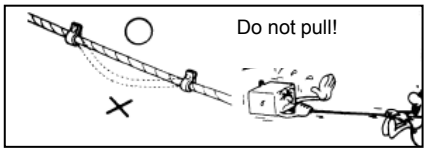


If the wire harness has to contact the edge or sharp corner parts, the contacting part shall be protected with hose or adhesive tape.

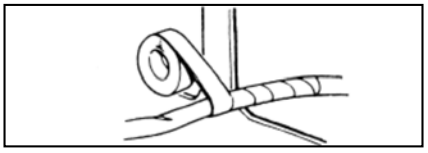

In case of a wire harness with garland, it shall be reliably harnessed.

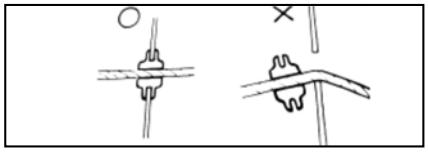

Do not damage the garnish of the wire harness.

Once the wire harness is damaged, repair it by coiling with plastic adhesive tape.

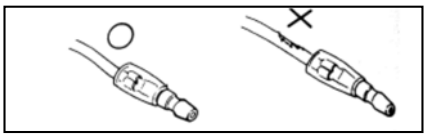

While mounting parts and components, do not press the wire harness.

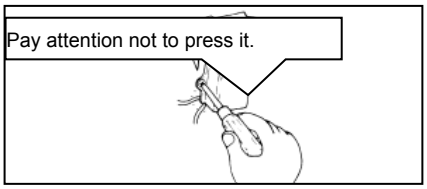


Do not mount wire harness with it twisted.

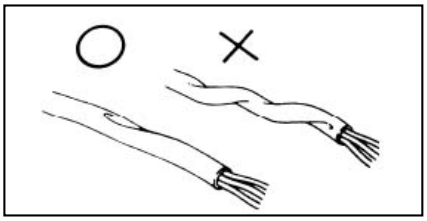

14. When wiring, note when turning it leftwards or rightwards to the limit position, the wire harness shall not be tightened up or slackened, and make sure there is no significant bending, pressing, intervening of marginal parts.

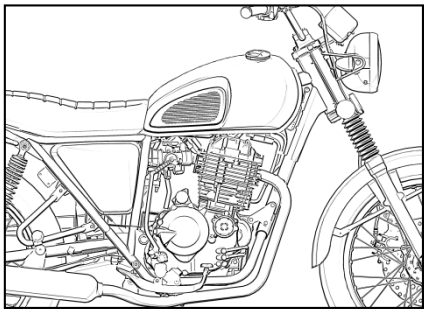

15. While using the test table, operate according to the maintenance manual after understanding the explanations in the instruction manual.

16. Do not drop or throw the parts and components.

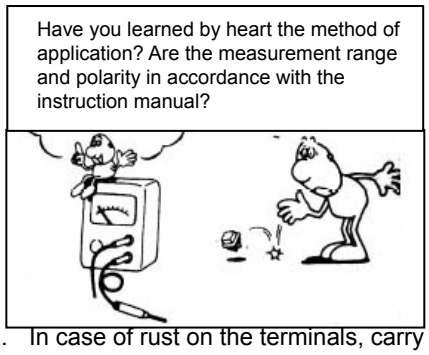


17. In case of rust on the terminals, carry out connection operation after disposing it with abrasive paper, etc.

18. Do not forcibly twist or forcefully bend the cable.

Because a deformed or damaged cable is the cause of bad operation and damage.

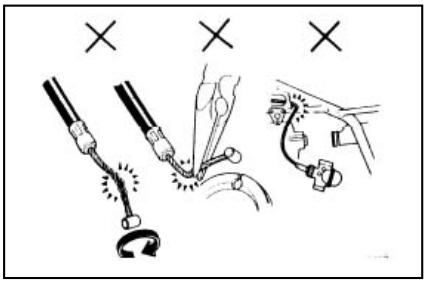

## Technical Data of Main Performance

| | Item | Data |
|---|---|---|
| Dimension & Weight | Length | 2130mm |
| | Width | 800mm |
| | Height | 1190mm |
| | Wheelbase | 1420mm |
| | Min. ground clearance | 160mm |
| | Complete vehicle weight | Non-loaded weight: 160kg, Curb weight: 155kg, |
| Vehicle body | Frame type | Cradle type |
| | Rake angle | 28° |
| | Front suspension device | telescopic & hydraulic composite damping |
| | Rear suspension device | spring & hydraulic composite damping |
| | Front Tire size | 90/90-19 |
| | Rear Tire size | 130/70-18 |
| | Front wheel pressure | Normally loaded: 225 kPa, |
| | Rear wheel pressure | Normally loaded: 225 kPa, |
| | Front brake | Single disc type Model Φ276 |
| | Rear brake | Drum brake Model Φ160 |
| | Fuel tank volume | 13L |
| | Fuel grade | 92# |
| Engine | Mode | Single-cylinder Oil –cooling 4-stroke engine |
| | Cylinder bore × Stroke | 85.0mm × 70.0mm |
| | Cylinder displacement | 397.2cc |
| | Compression ratio | 8.8:1 |
| | Max. power | 20.4kw/6500rpm |
| | Max. torque | 31.0N.m/5000rpm |
| | Valve clearance (cold) | IN: 0.07-0.10 mm<br>EX: 0.08-0.12 mm |
| | Valve driving gear | Chain drive |
| | Air filter | Oilpaper filter |
| | Cooling method | Oil-cooling |
| | Lubrication method | Pressure / Splash |
| | Engine oil grade | 15W/40-SF （summer ）and 10W/30-SF（ winter） |
| | Engine oil charge volume | 2.2L |
| | Engine oil filter element | Oilpaper filter |
| | Electric motor starting | Electric / foot start |
| | Idle speed | 1600±150r/min |
| | Net weight of engine | 40kg |

| | | |
|---|---|---|
| **Driving system** | Clutch | Wet clutch, coil clutch, paper friction wafer |
| | Clutch operating system | Manual mechanical |
| | Variable speed gear | 5-speed constant mesh |
| | Primary reduction ratio | 2.666 |
| | Transmission gear ratio | Ⅰ 2.615 |
| | | Ⅱ 1.789 |
| | | Ⅲ 1.350 |
| | | Ⅳ 1.120 |
| | | Ⅴ 0.892 |
| | Final reduction ratio | 2.533 |
| | Gear shifting mode | Left foot operated sequential type |
| | | Sequence: I－N－Ⅱ－Ⅲ－Ⅳ-V |
| **Electrical system** | Electric generator | Permanent magnet DC magneto |
| | Accumulator capacity | 12V 9Ah |
| | Power supply system | DC power supply, and the electric generator is only used to recharge the battery |
| | Fusible cutout | 15A/10A |
| | Spark plug | DPR8Z |
| | Spark plug gap | 0.6-0.7mm |
| | Ignition coil type | Open magnetic circuit |
| | Fuel supply mode | Electronically injection, ECU control |
| | Ignition mode | EMS |
| | Ignition advance angle | EMS |
| | Ignition timing | EMS |
| | Front lamp | 12V/55W/60W |
| | Turn lamp | Front: 12V10W Rear: 12V10W |
| | Stop / Rear-position lamp | 12V1.5W/0.5W |

## Standard Torque Values

### ENGINE

| Item | Quantity | Thread diameter (mm) | Torque value (N.m) | Thread locker |
|---|---|---|---|---|
| Cylinder head cover connecting bolt | 13 | 8 | 8～12 | |
| Cylinder bolt | 4 | 10 | 40～50 | |
| | 2 | 6 | 8～12 | |
| Valve adjusting screw nut | 4 | 10 | 8～12 | |
| Timing driven sprocket bolt | 2 | 7 | 7～11 | |
| Rocker-arm shaft cover | 2 | 14 | 24～28 | |
| Magneto flywheel fastening nut | 1 | 12 | 38～45 | LOCTITE 243 |
| Clutch fastening nut | 1 | 18 | 114～126 | LOCTITE 243 |
| Primary driving gear fastening nut | 1 | 18 | 143～157 | LOCTITE 243 |
| Oil drain plug | 1 | 12 | 28～32 | |
| Crankshaft, main-shaft bearing baffle screw | 5 | 6 | 8～12 | LOCTITE 648 |
| Stud | 1 | 6 | 8～12 | |
| Stud | 4 | 10 | 40～50 | |
| Exhaust valve stud bolt | 2 | 8 | 10～14 | LOCTITE 243 |
| Stator connecting bolt | 3 | 6 | 8～12 | LOCTITE 648 |
| Stator leads pressure plate bolt | 2 | 6 | 8～12 | LOCTITE 648 |
| Spark Plug | 1 | 12 | 18～25 | |
| Pensioner plate fastening bolt | 1 | 6 | 7～10 | |

**Vehicle body**

| Item | Quantity | Thread diameter (mm) | Torque value (N.r | Thread locker |
|---|---|---|---|---|
| Front wheel spindle | 1 | 14 | 50～60 | |
| Front vibration damper plate | 1 | 10 | 30～40 | |
| Real wheel spindle nut | 1 | 16 | 60～90 | |
| Rear fork shaft nut | 1 | 14 | 50～60 | |
| Engine hanging bolt | 3 | 10 | 30～40 | |
| | 4 | 8 | 20～30 | |
| Steering handle set bolt | 4 | 8 | 20～30 | |
| Front fork vertical pipe cap nut | 1 | 22 | 60～90 | |
| Lower connection plate set bolt | 2 | 10 | 30～40 | |
| Upper connection plate set bolt | 2 | 6 | 8～12 | |
| Rear sprocket nut | 6 | 8 | 20～30 | LOCTITE 243 |
| Brake disc fastening nut | 8 | 8 | 20～30 | LOCTITE 243 |
| Speed signal panel screw | 4 | 8 | 20～30 | LOCTITE 243 |
| Front brake caliper screw | 2 | 8 | 20～30 | LOCTITE 243 |

**In addition to the torque values of the important parts as listed above, the torque values for other standard fasteners are as follow:**

| Name and dimensions | Torque value (N.m) |
|---|---|
| 5mm bolt & nut | 4.5 ～6 |
| 6mm bolt & nut | 8 ～12 |
| 8mm bolt & nut | 18 ～25 |
| 10mm bolt & nut | 30 ～40 |
| 12mm bolt & nut | 50 ～60 |
| 5mm Screw | 3.5 ～5 |
| 6mm Screw | 7 ～11 |
| 6mm spool bolt & nut | 10 ～14 |
| 8mm spool bolt & nut | 20 ～30 |
| 10mm spool bolt & nut | 30 ～40 |

## Bar Tool

| | |
|---|---|
| 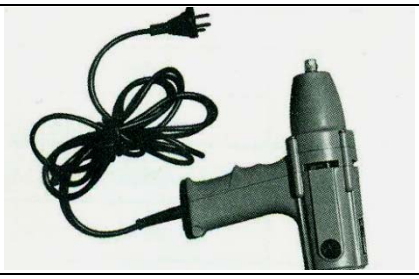 | 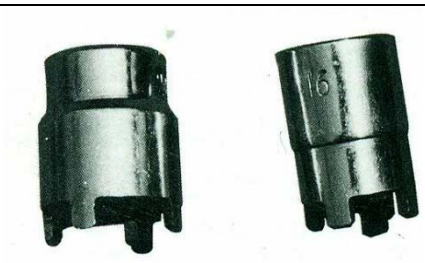 |
| Motorized gun: special power tool for mantling/ dismantling bolt and nut | Pawl socket: for mantling/dismantling oil filtering element nut and clutch nut |
| | |
| A and B bolt socket: for mantling/dismantling A and B bolt and exhaust muffler bolt<br>Adaptor: electric special tool for cross,hexagon gun tip<br>Valve adjusting socket: for valve clearance adjustment | Socket: for mantling/dismantling nuts and bolts |
| 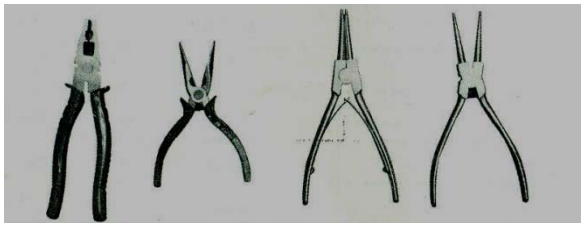 | |
| Cutting plier, Nipper plier, expansion plier: for mantling/ dismantling flexible retainer | T-socket wrench |

| | |
|---|---|
| 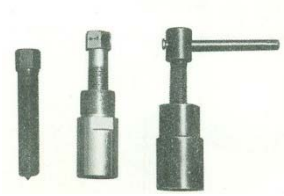 | |
| Magnetic generator rotor puller: for dismantling magnetic generator rotor | Rubber hammer, Iron hammer, Copper hammer |
| 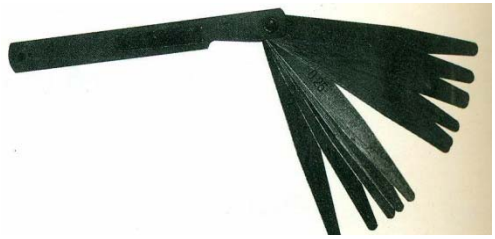 | |
| Feeler gauge: to measure the clearance of piston, cylinder, valve, etc. | Micrometer: to measure the dimensions of piston, piston pin, etc. |
| 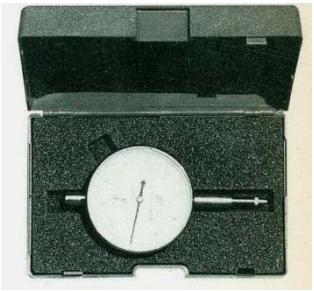 | 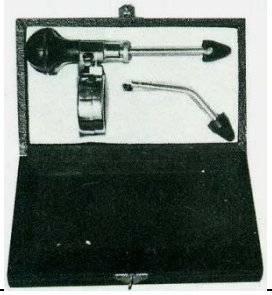 |
| Dial gauge: to measure the wheel bouncing, cylinder inner diameter, etc. | Cylinder barometer: to measure the cylinder pressure |
| 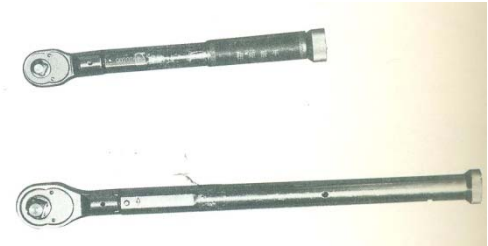 | 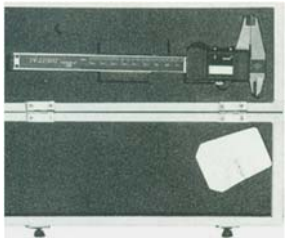 |
| Wrench: measure tightness of ad bolt | Vernia caliper: measure size of rear wheel hub internal diameter |
| 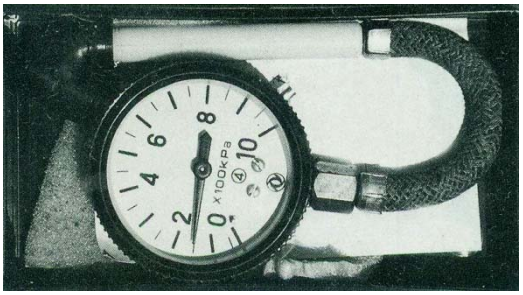 | |
| Tire barometer: to measure the tire pressure | |

## Maintenance Period Table

| Maintenance times / Maintenance Items | Period | Odometer km (Remark 2) | | | | |
|---|---|---|---|---|---|---|
| | | 1000 k m | 4,000 km | 8,000 km | 12,000 km | Remarks |
| * Fuel system | | | I | I | I | Check fuel filter |
| * Throttle operating system | | I | I | I | I | |
| * Throttle valve body | | I | I | I | I | |
| Air filter element | Remark 1 | | C | C | R every 12,000km | |
| Spark Plug | | | I | I | R every 12000km | |
| Engine lubricant oil | | Change at first 1000km, after first change, change every 2000km | | | | |
| Oil filter | | R | C each oil change, R every 12,000km | | | |
| * Timing chain tension | Remark 3 | I | I | I | I | A if necessary |
| Both intake and exhaust | Remark 3 | I | Check every 4,000km | | | |
| Clutch | | I | I | I | I | |
| *Driving chain | | I and L every 500km | | | | |
| **Front and rear brake system | | I | I | I | I | |
| ** Brake Pad | | I | I | I | I | |
| ** Brake fluid | | Change every 2 years | | | | |
| *Front and rear brake lamp switch | | I | I | I | I | |
| *Battery | Monthly | I | I | I | I | |
| *Suspension system | | I | I | I | I | |
| *Nut and bolt fastening | | I | I | I | I | |
| ** Wheel & tire | | I | I | I | I | |
| ** Steering column bearing | | I | I | I | I | |
| ** Steering backstay cable | I every 5000km, R every 10000km | | | | | |

Maintenance shall be carried out to the motorcycle in a specified period. The meanings of various symbols in the list are as follows: **I:** Carry out inspection, cleaning, adjustment, lubrication or replacement.

**C:** Cleaning. **R:** Replacement. **A:** Adjustment. **L:** Lubrication.

* This item is subject to maintenance by persons from SHINERAY Service Station. If the user has special service tools, maintenance accessories or maintenance ability, it can repair it by itself.

** To ensure safety, this item is only subject to maintenance by persons from SHINERAY Service Station.

Remarks:

① While driving in a dusty area, it shall be cleaned more often.

② When the odometer reads more than the given maximum value, its maintenance period shall still repeat as per the mile interval as stipulated in the table.

③ To ensure safety, the adjustment of timing chain and valve clearance shall only be carried out by persons from SHINERAY Service Station.

## Symbol Descriptions

Meanings of various symbols in this manual:

| | |
|---|---|
| NEW | Each time reassembled after being removed and disassembled, it must be replaced with a new one. |
| S TOOL | Use special service tools (SST) |
| O P TOOL | Use general-purpose tools. |
| 50 | Tightening torque of 50 N.m. |
| OIL | Use suggested engine oil. |
| Mo OIL | Use the mixtures of engine oil and molybdenum disulfide |
| LOCK | Use thread locker. |
| SEAL | Use sealant. |
| Li | Use lithium base grease. |

| | |
|---|---|
| | **Explanation** |
| | Measures to be prompted during operating, inspecting and maintaining. |
| | **NOTICE:** |
| | Special instructions or disposal measures given to prevent motorcycle from being damaged. |
| | **WARNING:** |
| | Special instructions or measures given to avoid serious damages or personal injuries. |

# 2. Lubrication system

| | |
|---|---|
| Maintenance notice | Inspection of lubricating oil |
| Troubleshooting | Replacement of lubricating oil |
| Lubricating Position of Complete Vehicle | Cleaning of Lubricating Oil Strainer |
| Lubrication of Control Lines | Cleaning and Replacement of Lubricating Oil Filter |
| Engine Lubrication System Diagram | Oil Pump |

## Maintenance notice

This section introduces the inspection and replacement method of engine lubricating oil as well as the cleaning method of lubricating oil strainer and lubricating oil filter. It also introduces various lubricating positions of the complete vehicle of this model. As an important factor that influences the engine's performance and life span, the lubricating oil must be selected as per regulations; ordinary engine oil, gear oil, vegetable oil, etc. are not allowed to be used instead of it. This engine was filled with gasoline engine oil of 10W/40EG grade when leaving factory for sale. If you want to use other lubricating oil, its quality scale must reach Grade SG, and its viscosity shall be selected according to the accompanying diagram depending upon region and air temperature changes. While replacing lubricating oil, fully discharge the original lubricating oil in the crankcase and clean it up with washing kerosene, and then refill fresh lubricating oil as per regulations.

The lubricating oil inside the engine must be fully discharged before inspection and cleaning.

**Technical specifications: Lubricating oil charge volume: 1.8L**

**Oil pump flow rate: 10L/min (when engine speed is at 4000 rpm).**

**Tightening torque of oil drain plug:28-32N.m**

**Selecting viscosity as per temperature conditions**

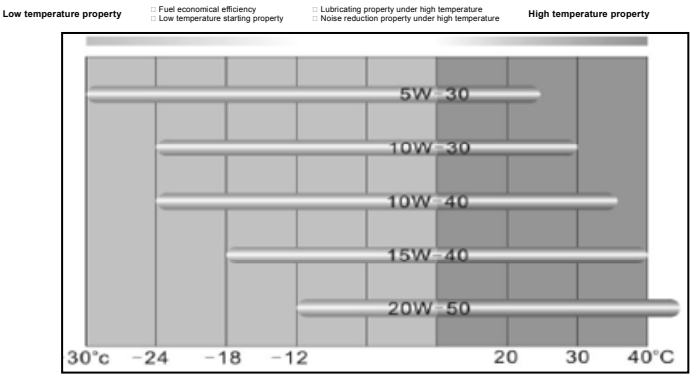


**WARNING:**

***Repeatedly contacting the engine lubricating oil for a long period may cause skin cancer. Although such possibility is small when you deal with used engines oil every day, Care must be taken to fully cleanse your hands with soap and water after dealing with the used engine oil. Children are strictly prohibited from getting near to it.***

## Troubleshooting

- **Lubricating oil contaminated**
  1. Fail to replace lubricating oil according to the maintenance period table;
  2. The pouring orifice thread is damaged thus causing poor seal;
  3. The piston ring is worn.
- **Lubricating oil pressure low**
  1. The oil level is too low;
  2. Oil through, orifice port or oil strainer is clogged;
  3. Oil pumps failure.
- **Lubricating oil consumes too fast**
  1. There is leakage with the engine;
  2. The piston ring is worn.
  3. The inlet/exhaust valve guide is worn;
  4. The oil shield is worn or damaged.

## Lubricating Position of Complete Vehicle

Among the positions shown in the above diagram, besides applying dedicated lubricating oil for chain to the driving chain, apply lithium base grease to all other positions.

All lubricating oils not specified for use in this manual shall be ordinary common lubricating oil.

All sliding surfaces and cables not shown in this diagram shall be coated with lubricating oil or lubricating grease.

**Lubrication of Control Lines**

Regular lubrication shall be carried out to the clutch control line, throttle control line and steering cable. To do this, remove the upper joining parts of all control lines, sufficiently lubricate and maintain their hoisting cables and all points of support with lithium base grease.

## Engine Lubrication System Diagram

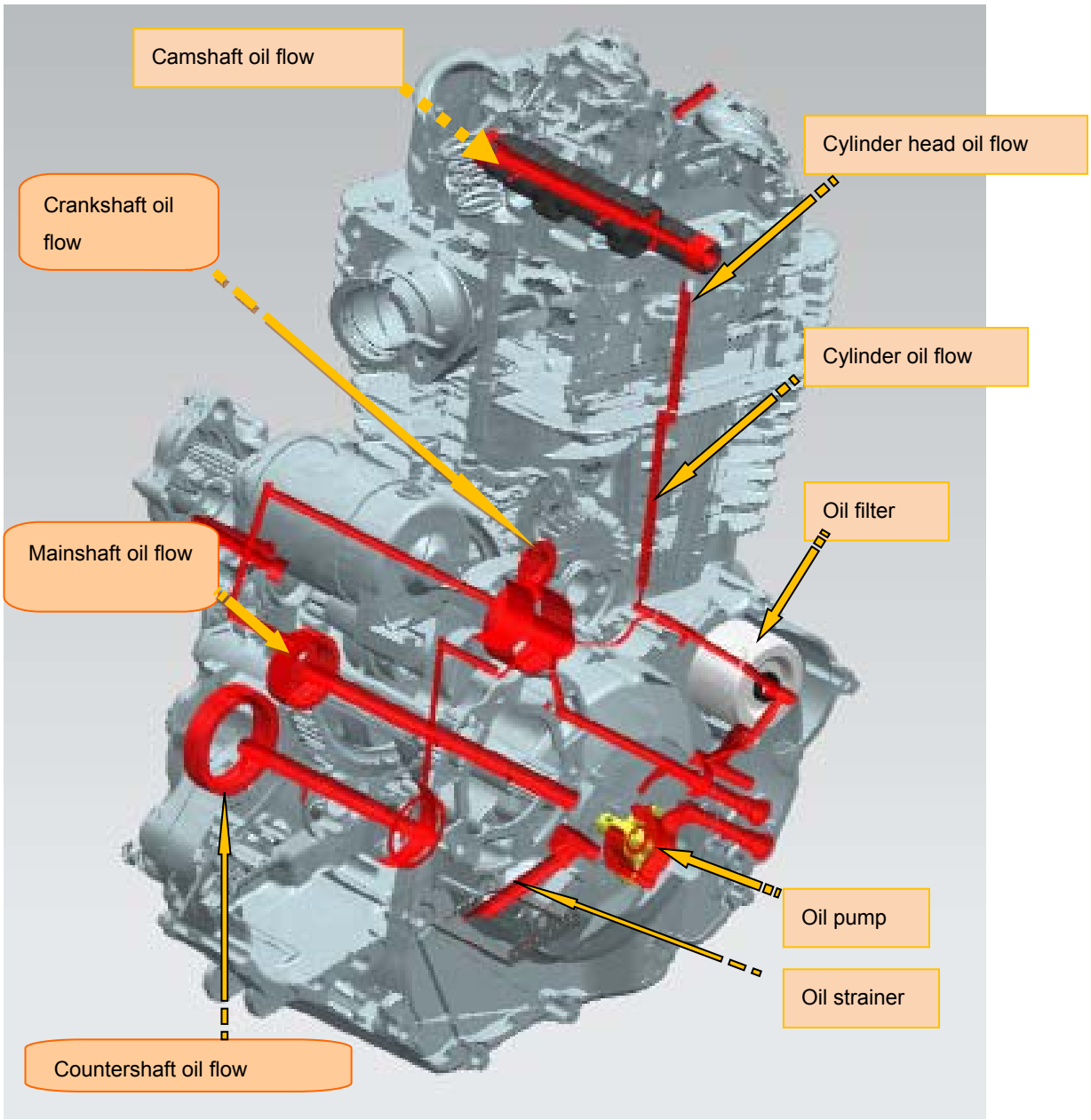


Right crankcase body oil through

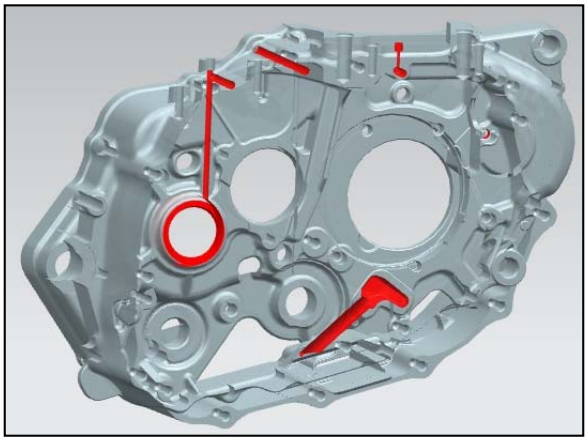

Right crankcase cover oil flow

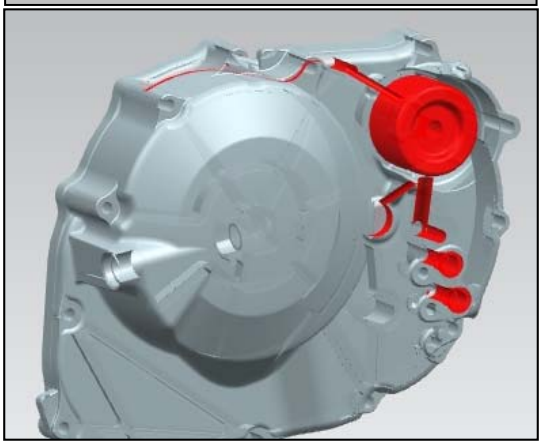

Left crankcase body oil flow

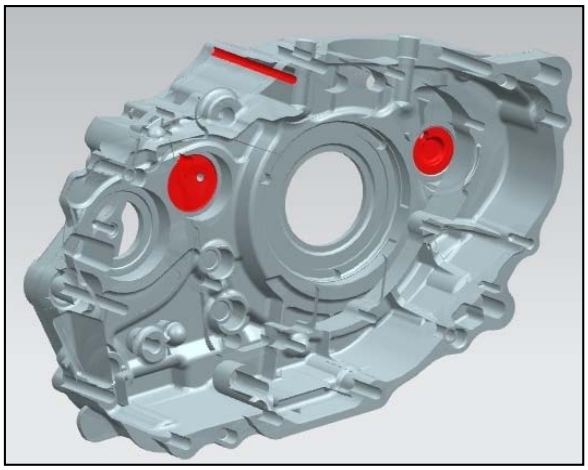

Cylinder block, cylinder head, camshaft bearing seat and a camshaft oil flow

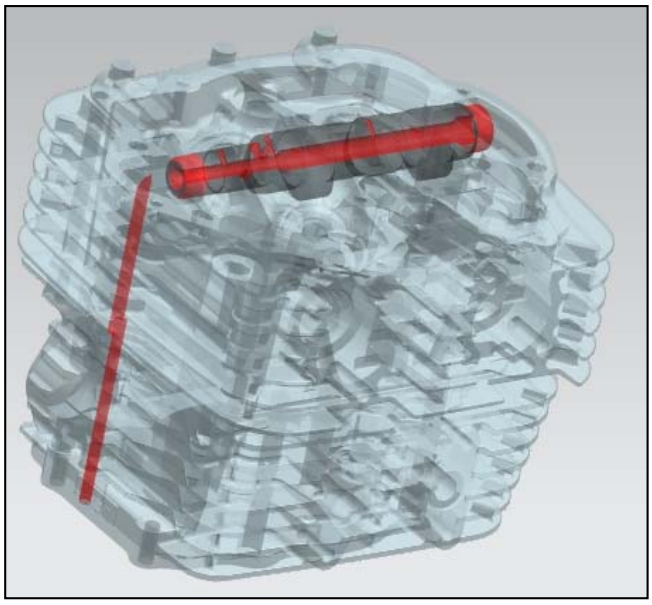

## Oil level check

Run the engine for 2-3 minutes. Check whether or not the engine oil level is in the middle of the range on the engine oil dipstick.

Add oil if necessary.

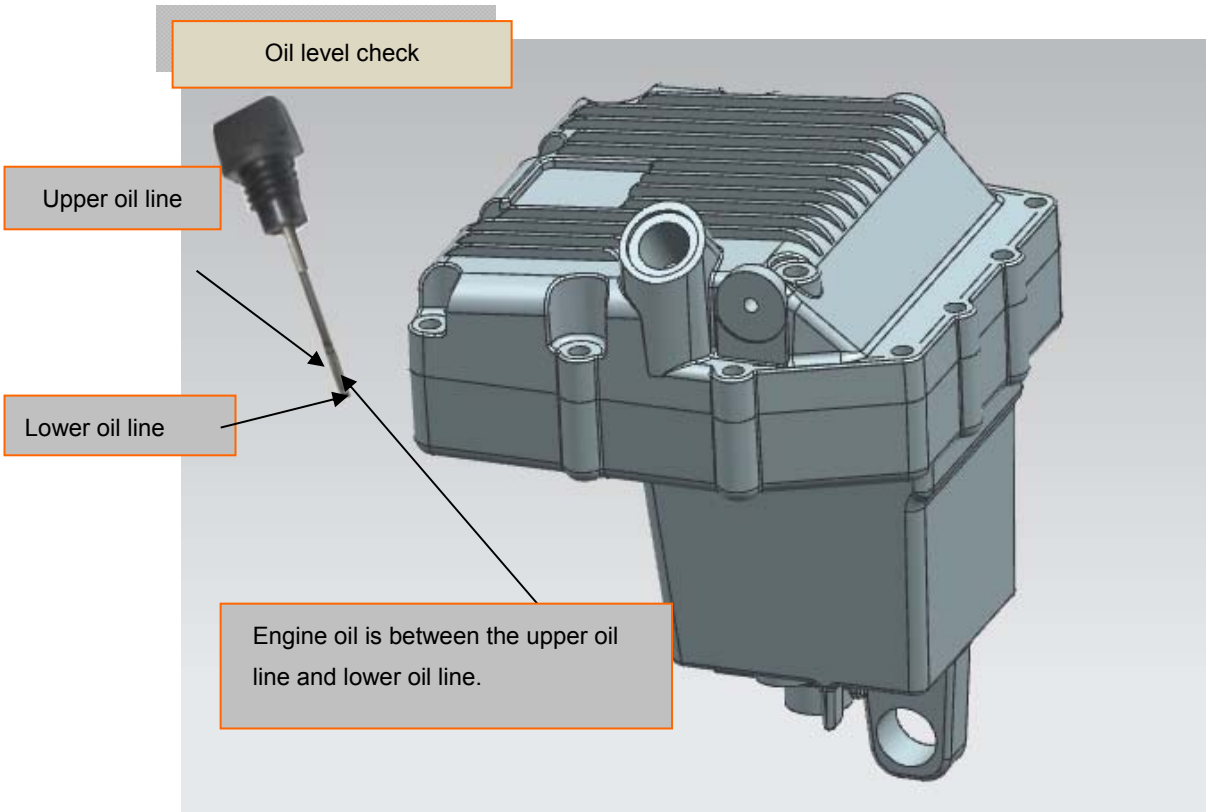


Refilling method: Remove the oil filler plug, refill the engine oil slowly with a funnel until the oil level in the engine oil dipstick

reaches the upper-middle limit. Then insert the oil filter plug and screw it up.

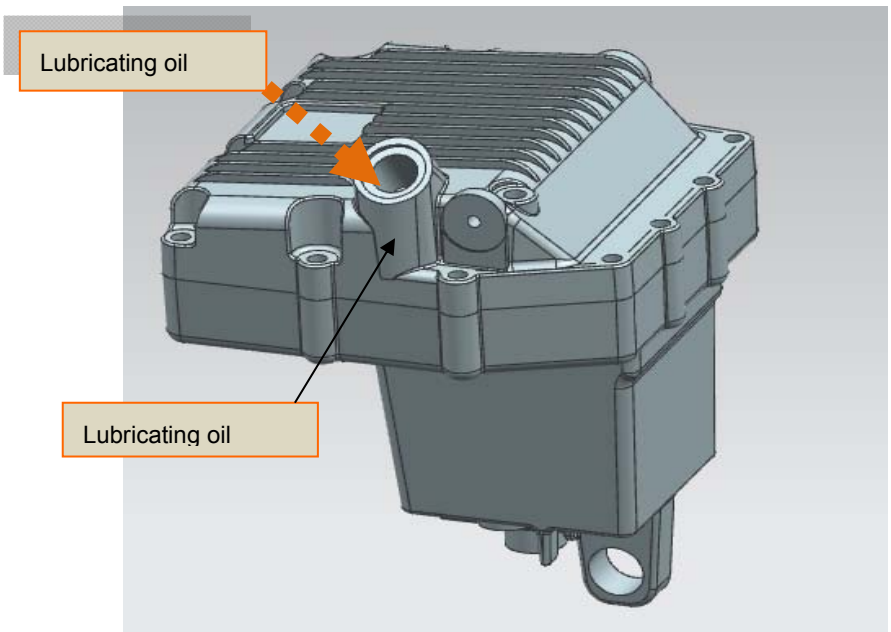


## Replacement of lubricating oil

While replacing lubricating oil, it shall be carried out before the engine has cooled down. This will ensure quick and complete discharge of the engine oil inside the crankcase.

When replacing, unscrew the oil drain plug and discharge the waste engine oil, and then clean the oil drain plug, engine oil strainer, engine oil filter, etc. Finally, insert the oil drain plug. Unscrew the oil filter plug and slowly refill 1.8L new engine oil of the specified trademark into the crankcase, then insert the oil filter plug.

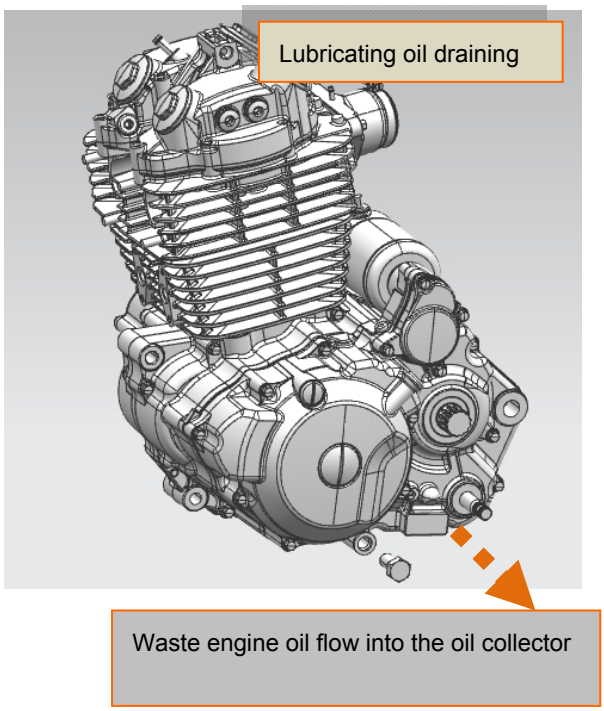


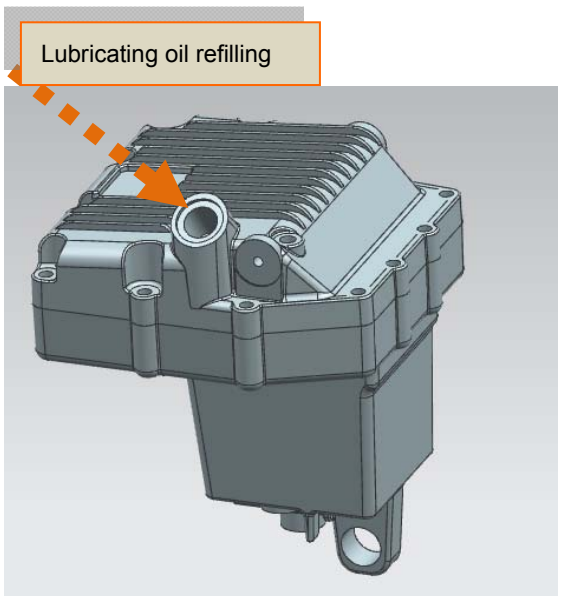


**CAUTION**

***Application of engine oil of poor quality will have an impact on the functional performance and life span of the motorcycle engine.***

## Cleaning oil filter

Clean oil filer at each engine oil replacement.

While cleaning, you should unscrew the oil drain plug to drain the waste engine oil, and clean the filter with detergent; place the motorcycle side down to facilitate cleaning as required. Then insert the oil drain plug, and proceed with the remaining steps according to the method of “Replacement of Lubricating Oil".

## Cleaning and Replacement of Lubricating Oil Filter

Remove the engine oil filter cover to detach the engine oil filter element, clean the filter cover and filter element with detergent, and then mount the clean engine oil element. Replace with a new one as required.

Check for damage of the engine oil filter cover and its O-shaped sealing ring; replace with a new one as required.

Mount the engine oil filter cover and screw up the bolt to the specified torque.

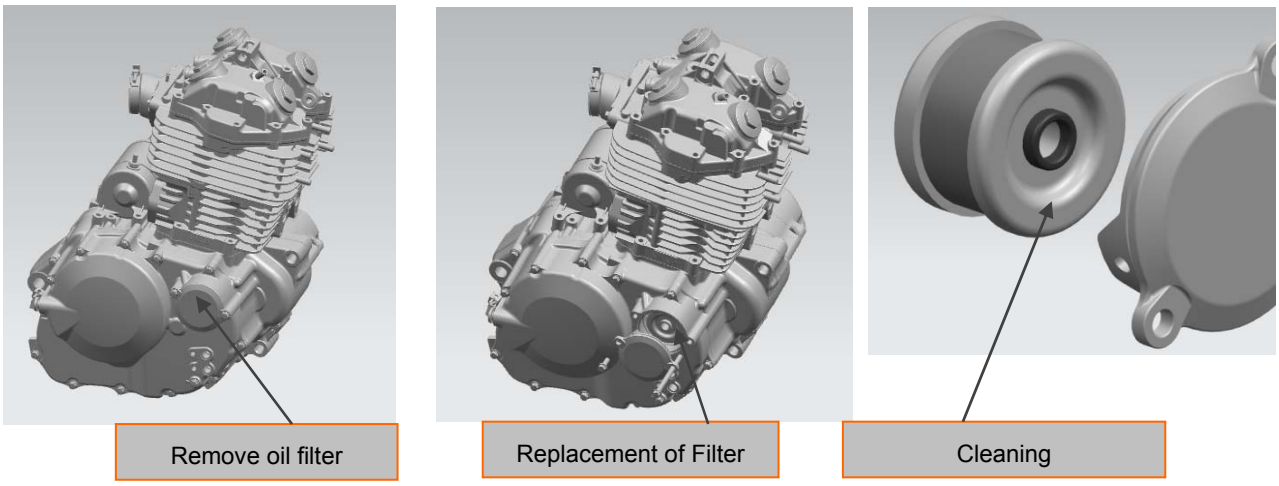


### ⚠ Notice

***Before the crankcase is refilled with fresh engine oil, the engine oil filter must be cleaned.***

## Oil Pump

In case of failure, the oil pump needs to be removed for repair or replacement.

This section includes the following contents:

Steps and illustration for oil pump removal;

Steps and illustration for oil pump installation;

Disassembly and assembly of oil pump, etc.

### Steps for oil pump removal:

1. Remove the oil drain plug to drain the engine oil inside the crankcase.

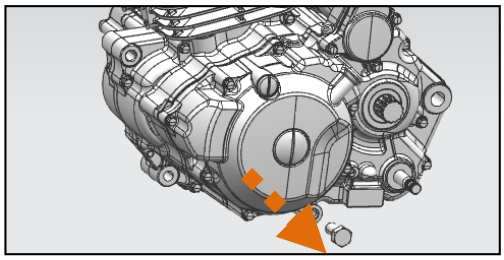

2. Loosen the right crankcase cover connecting bolts to detach the right crankcase cover components.

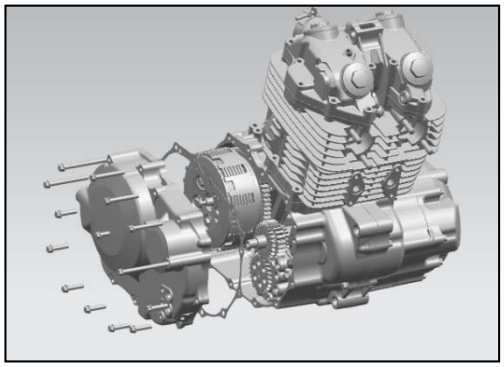

3. Use the clutch push rod extractor S TOOL to remove the clutch push rod assembly; use the fixing tool S TOOL to prevent the clutch and the primary driving gear from rotating; loosen the nut to remove the clutch component,

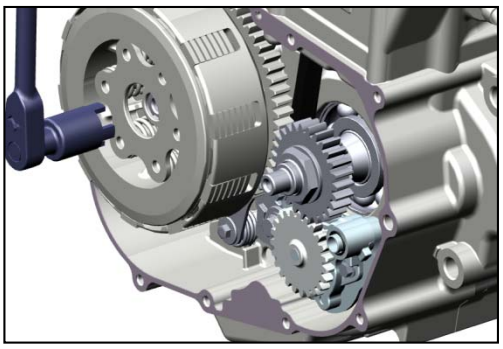

4. Remove the oil pump。

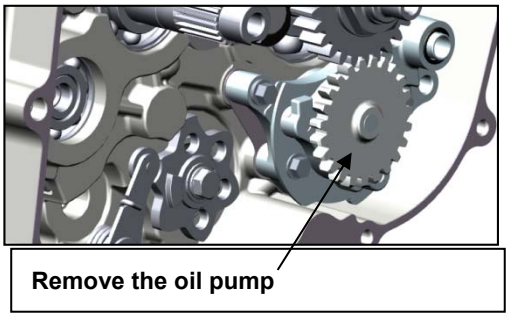

## Steps for oil pump installation:

The installation procedures are the removal procedures in reverse order. Pay attention to the following points during the installation:

1、 The spare parts shall be clean and intact；

2、 Install clutch assembly, and the retaining nut M18 shall be coated with thread retaining adhesive LOCTITE243; tightening torque: 114N.m -126N.m；

3、Install clutch push rod assembly；

4、 After the right crankcase cover is mounted in place, the angle and position of the clutch operating lever may possibly change; readjustment shall be carried out to accommodate the adjustment of clutch control line；

5、 The seal washer at the bolt under the oil pump, shall be replaced with new ones.；

6、Remember to refill engine oil after all these are completed.。

### CAUTION

***The clutch retaining nut must be screwed up to the specified tightening torque,must be applied to prevent the nut from getting loose.***

## Disassembly and assembly of oil pump

Disassemble and assemble oil pump according to the following diagram.

While assembling, the rotor shall be coated with engine oil.

While assembling, check the clearances between the inner and outer rotors of the oil pump; replace it if it exceeds the wearing limit.

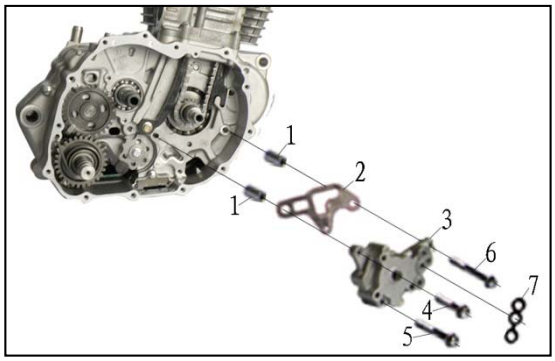


| No. | Procedures | Quantity | NOTICE |
|---|---|---|---|
| | **Removing order** | | **Installation is in the reverse order of removal** |
| 1 | Oil pump location pin | 2 | |
| 2 | Oil pump gasket | 1 | Replace it with a new one while assembling |
| 3 | Oil pump assembly | 1 | Coat it with engine oil; replace it when exceeding the wearing limit |
| 4 | Flange bolts M6*32 | 1 | |
| 5 | Flange bolts M6*50 | 1 | |
| 6 | Flange bolts M6*40 | 1 | |
| 7 | Oil pump rubber ring | 3 | |

# 3. Inspection and adjustment

| | |
|---|---|
| Maintenance notice | Running system |
| Check-up of spark plug | Clutch control line |
| Machine oil checking | Driving chain |
| Oil output tank | Battery Checking |
| Timing phase | Replacement of Fuse |
| Cylinder pressure | Brake lamp adjustment |
| Timing chain tension | Headlamp dimming |
| Valve clearance | ABS (Anti-locked Braking System) |
| Air filter | Steering stem bearing |
| Idle speed | Suspension system |
| Throttle control | Bolts, nuts and fasteners |
| Brake system | |

## Maintenance notice

The parts that are washed should proceed thru relevant examination work．The purpose is to confirm that the part whether it needs repair or replace．The examination method is divided into three methods include direct examination，testing examination and detecting examination

Direct examination method

This method does not need instrument and other tools，it checks and determines the technologic state of part just according to the sense organs of human being．The way is simple and easy to use，it is used wide in motorcycle maintenance.

Testing examination method

This way is a way that test the size of part and change of geometric form with gauge and instrument，and make contrast to the allowed limit with the data to confirm the technologic state of part．The accuracy of this way is high，but before test should check the precision of gauge and instrument carefully and choose the testing position reasonably.

Detecting examination method

This way can test the invisible flaws of part．In motorcycle maintenance, generally adopt the best easy way--dipping oil to beat by hammer，that means putting the parts into coal oil or diesel oil to soak several minutes then take out and wipe the surface，spread talcum powder on the surface of parts uniformly，beat its nonworking sue face lightly by small hammer. owing to beating will cause versatility of part, if part has crack，then the oil sludge that dipped into crack originally will splash due to beating and versatility，then the talcum powder on surface will be dyed yellow，so one yellow line will be revealed at the crack point.

## Explanation:

***Unless expressly stated or indicated in the maintenance period table, check and adjust all parts of the XY400-C motorcycle according to the contents hereof before using it.***

**Technical specifications**

- Throttle bar free stroke： 2-6mm
- Recommended spark plug： DPR8Z
- Spark plug gap： 0.6-0.7mm
- Valve clearance (cold) IN）0.07-0.10mm
- EX）0.08-0.12mm
- Idle speed： 1500±50（rpm）
- Cylinder pressure： ⩾0.8MPa(300rpm)
- Driving chain tension： 15～25mm
- Rear brake pedal free stroke 20～30mm
- Front brake operating handle free stroke 10～20mm
- Clutch operating handle free stroke 10～20mm

## 1. Check-up of spark plug

①Remove the spark plug cap. Remove the spark plug with a socket wrench. Visually check whether there is any damage with the spark plug insulator and ablation with the electrodes. If yes, replace them.

②Check the spark plug electrode gap with a plug gauge. Spark plug electrode gap 0.6 -0.7mm. Carefully adjust the electrode gap. Then clear away the accumulated carbon and contaminants with a spark plug cleaner or string wire. Check that the spark plug sealing gasket is in good condition.

③To mount the spark plug, manually screw up the spark plug first, and then tighten it with a socket wrench. Put on the spark plug cap.

The spark plug of the designated type should be used.

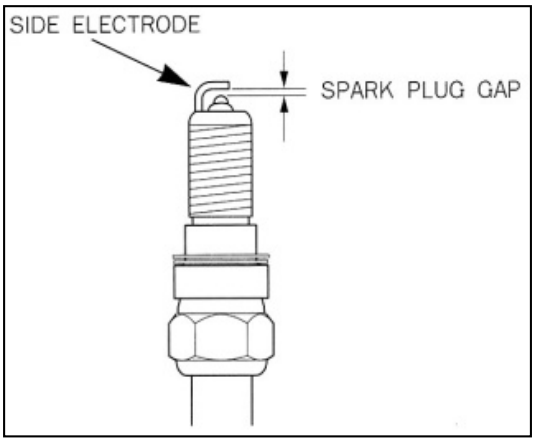


## 2. Machine oil checking

For some maintenance operations, one or both the side panels need to be removed.

To remove the left- and right-hand side panels, operate as follows:

- Detach the panel (1) from the bottom attachment by pulling it outwards.
- Lift out the panel (1) by unhooking it from the top hooks.

For refitting, operate in reverse order from removal.

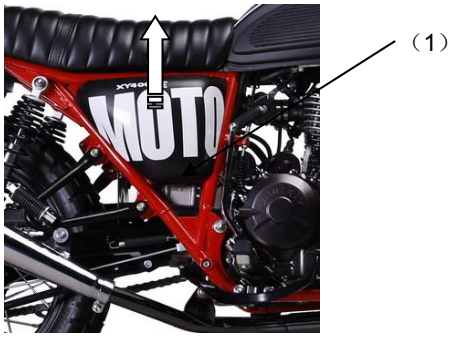


Engine-transmission oil level

Note*: Check the oil level when the engine has just been turned off and is still hot.

- Position the motorcycle on a flat surface in vertical position.
- Remove the RH side panel as described in the relative paragraph.
- Unscrew the dipstick and remove it; clean it with a cloth and reinsert it in the filling hole without screwing it back in, then remove it again and check that the oil level is between the “MIN” and “MAX” notches.
- If you need to top up, pour in oil through the hole until reaching the correct level.
- Reinsert the dipstick and screw it back into place.

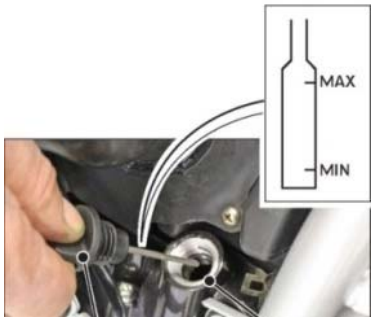


**Caution**

***The insufficiency or poor quality of the engine oil will lead to the premature wear-out of the engine.***

**Replacement of lubricating oil**

While replacing lubricating oil, it shall be carried out before the engine has cooled down. This will ensure quick and complete discharge of the engine oil inside the crankcase.

When replacing, unscrew the oil drain plug and discharge the waste engine oil, and then clean the oil drain plug, engine oil strainer, engine oil filter, etc. Finally, insert the oil drain plug. Unscrew the oil filter plug and slowly refill 1.8L new engine oil of the specified trademark into the crankcase, then insert the oil filter plug.

**Caution**

***Application of engine oil of poor quality will have an impact on the functional performance and life span of the motorcycle engine.***

Screw plug for oil draining

**Cleaning of Lubricating Oil Strainer**

It shall be carried out while replacing lubricating oil.

While cleaning, you should unscrew the oil drain plug to drain the waste engine oil, and flush the strainer with cleaning agent; place the motorcycle side down to facilitate cleaning as required. Then insert the oil drain plug, and proceed with the remaining steps according to the method of “Replacement of lubricating oil".

Cleaning and Replacement of Lubricating Oil Filter

Remove the engine oil filter cover to detach the engine oil filter element, clean the filter cover and filter element with cleaning agent, and then mount the clean engine oil element. Replace with a new one as required.

Check for damage of the engine oil filter cover and its O-shaped sealing ring; replace with a new one as required.

Mount the engine oil filter cover and screw up the bolt to the specified torque.

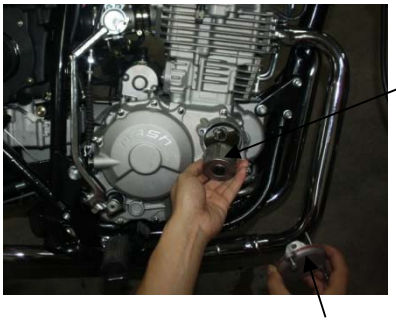


**Notice**

***Before the crankcase is refilled with fresh engine oil, the engine oil filter must be cleaned.***

## 3. Oil output tank

1) Oil pot total volume 2.2L, intermediate position oil dipstick oil pot on the line for 1.8L。

2) Pot plus external pipe and radiator total volume loading was 2.3 ± 0.05L。Filling volume for 2.2L。Oil radiator shall be installed in the face of location of the wind。

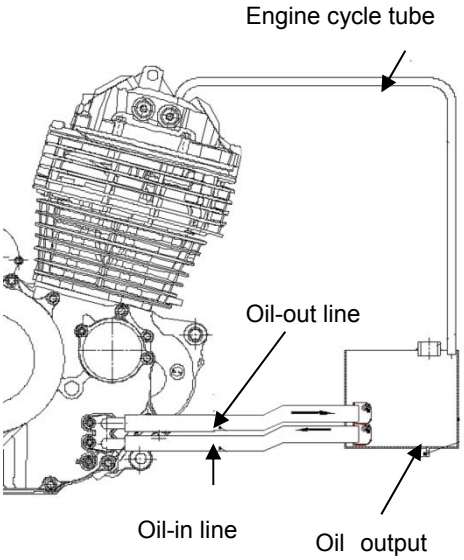


## 4. Timing phase

It shall be carried out when the vehicle is new or there is any question about the timing phase.

Remove the cylinder head cover

Turn the crankshaft pulley Counterclockwise to align the scale line “I” with the indication mark “▼” on the front-left cover.

When the piston is at the upper dead point, the scale line on the camshaft is at the same level with the.

### ⚠ Notice

***At this point, the piston must be at the upper dead point of the compression stroke other than that of the exhaust stroke.***

Adjustment of Ignition Time

That the ignition lead angle is not correct will cause a series of problem that engine is difficult to start，power decrease，oil consumption increase，engine overheats，burning is not complete，emission exceed standard，use life reduce and so on．So should adjust the ignition lead angle at first

Need not adjust the ignition timing if engine without contact ignition．If the ignition system is abnormal，should check electronic ignition，high-voltage coil，charging on the generator and trigger coil etc．

After properly timing, pull off the tensioner locking key and coat the mixture of engine oil and molybdenum disulfide on the tensioner to make it tensioned; mount the sprocket retaining plate and retaining bolt.

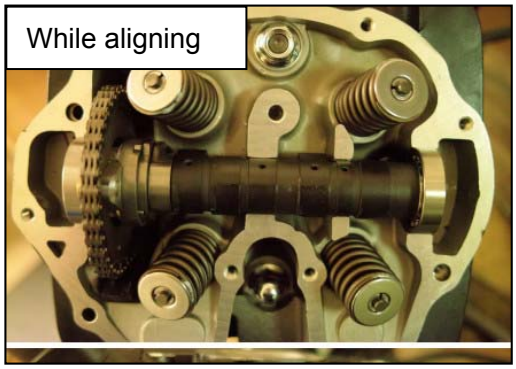


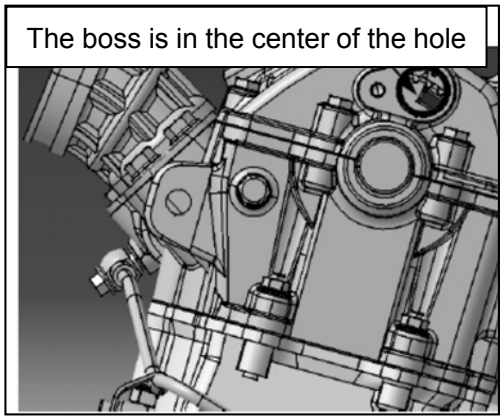


### Cylinder pressure

When the engine fails to start or is difficult to start, or when questioning the cylinder pressure is abnormal after other possible faults have been excluded, check the cylinder pressure.

**Cylinder pressure: ≥0.8MPa/300r/min.**

While testing, remove the spark plug and mount a pressure gauge at the position where the spark plug is mounted; fully open the throttle bar and electronically start the engine, and then check all connecting points of the pressure gauge for gas leak. Zero the pressure gauge and restart the engine until the pressure gauge reading stops rising. The maximum reading of the pressure gauge can usually be reached after 1 or 2 startups. Such maximum reading shall be the cylinder pressure. Upon completion of testing, mount the spark plug to its original position.

The main reasons for insufficient cylinder pressure include:

- **Incorrect valve clearance adjusted**
- **Valve leakage**
- **Cylinder head sealing gasket ablated**
- **Piston ring or cylinder worn**
- **Piston ring worn**

The main reasons for excessive pressure include:

**Presence of accumulated carbon inside the combustion chamber or on the piston top**

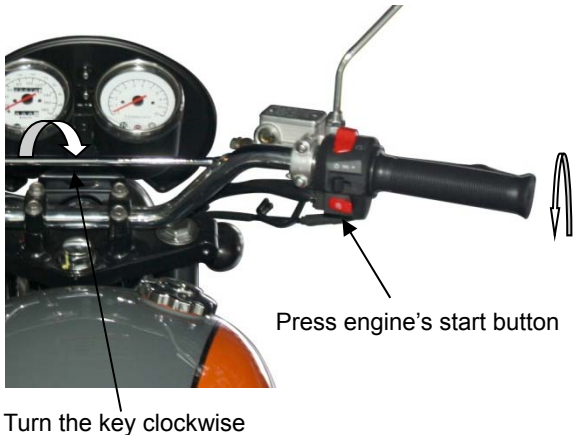


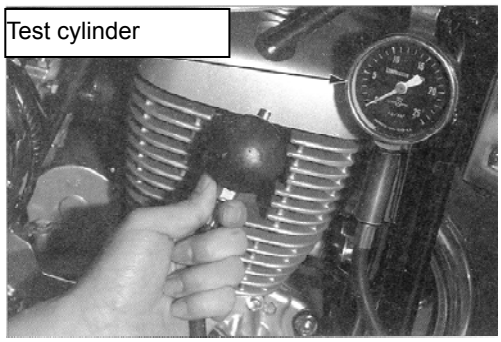


**Timing chain tension**

Start the engine to run at idle speed.

Carefully listen to the sound given off by the running engine: if the timing chain gives off ringing sound "Dah-Dah", it indicates insufficient tension of the chain tensioner, replace it with a new one.

To replace the chain tensioner:

Unscrew the 2-M6×16 socket cap screw to remove the sealing washer and detach the old chain tensioner. Take care not let the sealing washer and so on fall into crankcase. Insert the tensioner 4 locking key into the tail end of the new chain tensioner, turn and retract the front end of the tensioner and lock it, then replace with a new sealing washer, mount the new chain tensioner and fasten. Pull off the tensioner locking key to tension the timing chain. Replace with a new sealing washer and screw up the bolts on the tail end of the chain tensioner.

⚠**Notice**

***When the timing chain is loosened, never turn the crankshaft for fear of interlocking tooth while timing.***

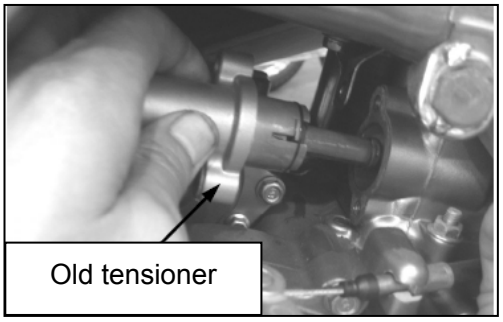

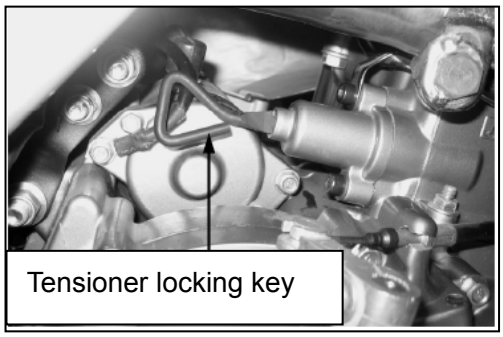


## 5. Valve clearance

### ⚠ Notice:

***While adjusting the valve clearance, the engine shall be cold.***

**(Temperature ＜35℃)**

Noise will stem from too big valve clearance. However if there is too small gap or even no gap at all, closing of the valve will be hindered, which will cause many problems such as engine stall, power loss, etc. Therefore, the valve clearance must be checked periodically.

The valve clearance should be inspected and adjusted on a cold engine by the following procedures:

Remove the caps of the central hole and the ignition timing observation hole on the left crankcase cover.

Remove the caps of the two air valves on the cylinder head.

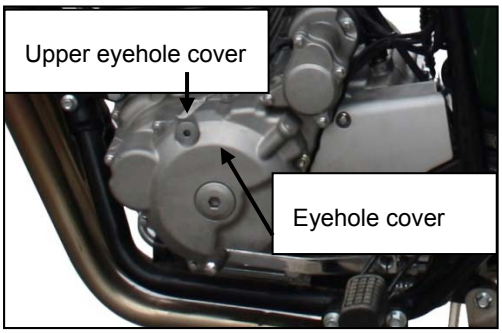


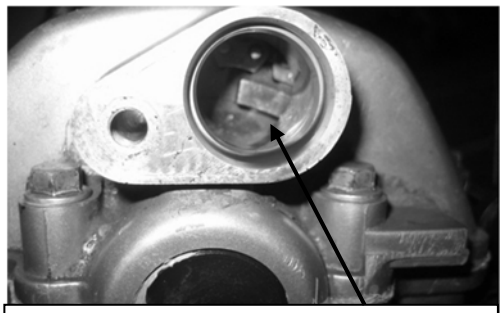


Turn the nut of the flywheel clockwise until the engraved “T” mark on the flywheel aligns with the engraved line on the top of the crankcase cover, and both intake and exhaust rock arms do not move but stop at their loosest position, which shows that the piston is in its top dead center position of the compressing stroke. If the “T” mark is near its right position but rock arms will move apparently when flywheel rotate a small angle, the flywheel is not in the compressing stroke but exhaust/intake stroke. In this case, continuously turn the flywheel clockwise for 360 degrees to the top dead center position of the compressing stroke, where the valve clearance can be adjusted. Afterwards, check the valve clearance by inserting a clearance gage into the gap between adjusting screw and the end of the valve.

The specified valve clearance is : 0.07-0.10mm for intake valve and 0.08-0.12mm for exhaust valve respectively.

If clearance adjustment is needed, loosen the locking nut on the rock arm, turn the adjusting nut till a slight resistance is felt on the inserted right clearance gage.

At the end of the adjustment, tighten the “Locking out ”to prevent loosening and another check to make sure that the valve clearance is OK before all those dismounted caps are refitted on.

While adjusting, unscrew the retaining nut and then turn the adjusting screw until you feel that the clearance gauge is slightly pulled. Then secure the adjusting screw using the valve adjusting tool S TOOL, and then screw the retaining screw. And finally, check the valve clearance.

## 6. Air filter

**Cleaning and replacement of air filter**

- Remove the left side covers Handle it carefully to avoid scraping.
- Remove 4 screws（1）, remove Air filter cover（2）

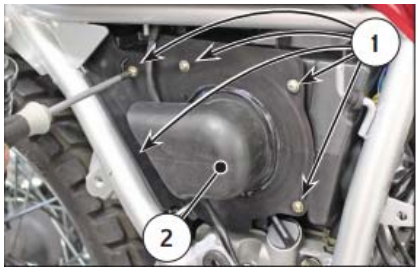

**Description**

1) ***Remove the filter element and check whether it is in normal condition. This is a paper filter element, of which the surface can be cleaned with compressed air; if the filter element is too dirty, broken or damaged, replace it;***
2) ***While driving in a more dusty area, the time period for cleaning and replacing air filter element shall be shorter.***
3) ***Keeping the cleanness of the air filter may improve the engine's operating efficiency and prolong its life span.***

## 7. Idle speed

⚠**Notice**

***Check and adjust the idle speed after all other items of the engine have been adjusted to the specified ranges.***

For this model, the idle speed is controlled by an ECU. Since the intake flow at idle speed has been properly adjusted upon delivery, do not adjust the idle speed adjusting screw as desired. In case the idle speed is unsteady, zero or too high, find out the possible causes with the troubleshooting method for the EMS system and eliminate the trouble.

Under the monitoring of the maintaining and diagnostic instrument, check whether the ignition advance angle is between 0°-15°. If the ignition advance angle is more than 15°, it indicates the throttle valve's intake flow at idle speed is insufficient, and at this point, the idle speed is unstable or null; if the ignition advance angle is less than 0°, it indicates the intake flow at idle speed is too big, and at this point, the idle speed is often as high as more than 1800 r/min. Only under the above two cases, unscrew the retaining nut and adjust the idle speed adjusting screw to let the intake flow reach the specified flow.

Idle speed 1500 r/min ± 50 r/min.

After adjusting toe-in, remember to screw up the retaining nut.

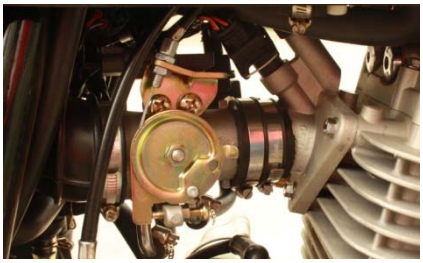

Maintaining & diagnostic instrument

## 8. Throttle control

First, check whether the throttle control line is deformed, twisted or damaged.

Then, measure the throttle bar free stroke. Turn the bar to lean it against one side of the free stroke, and draw a straight line between the bar and the balance weight with a mark pen, and then turn the bar to lean it against the other side of the free stroke; measure the distance the straight line staggers, i.e. the throttle bar free stroke.

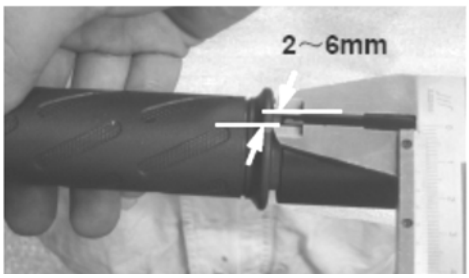


If the free stroke is insufficient or too big, make adjustment.

**Adjusting methods:**

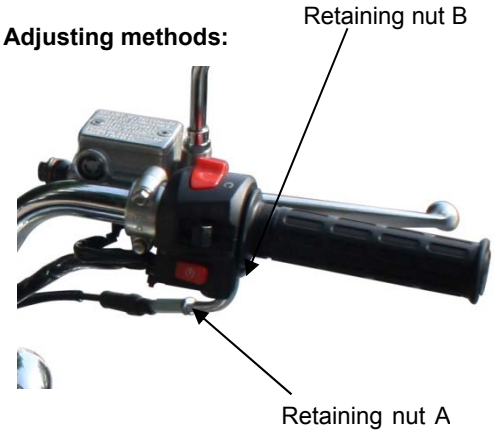

**Fine adjustment:**

Pull open the rubber lagging, unscrew the retaining nut A, and turn the adjusting solenoid to adjust to a satisfied free stroke. And then screw up the retaining nut A and mount the protective rubber lagging.

**Coarse adjustment:**

If the fine adjustment is not satisfying, separate the throttle control line with throttle valve body and unscrew the retaining nut B to make adjust the free stroke in a larger range. Screw up the retaining but B after the adjustment.

Check whether the throttle can turn smoothly from full open to full close at any position. If there is clogging, adjust or replace it.

**WARNING:**

***Use not full throttle to the free stroke motorcycle is a dangerous operation, rotating the handle, not full throttle to the free stroke can make the engine speed increases suddenly.***

## 9. Brake system

Check the front brake handle free stroke.

**The brake handle free stroke 10-20mm.**

Brake fluid level inspection:

Check the brake fluid level in the front brake cylinder: if the level is too low but not emptied, directly refill brake fluid (DOT 3 brake fluid).

If the brake fluid inside the cylinder is found cloudy, impure or smelt, Drain and refill the brake fluid. Refer to the brake fluid vacuum filling method in the next section.

I If the brake fluid in both the front cylinders is drained, bleed air from the deflating valve of the brake caliper with a vacuum pump, and then refill brake fluid into the cylinder.

The fluid level in the pump reservoir may never drop below the minimum notch (LOWER) (1) visible on the port (2) on the rear of the pump body

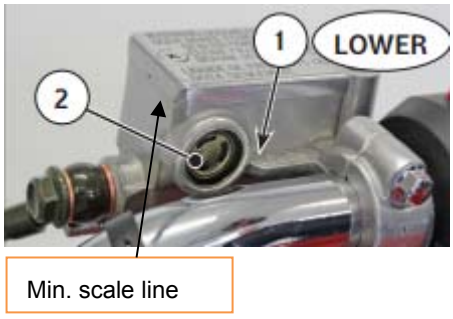


**Brake fluid vacuum filling method:**

This method is only applicable to refilling brake fluid for new vehicles or when the brake fluid in the cylinder is drained.

1) Bleed air from the deflating valve of the vacuum pump's caliper

2) Open the cover of brake cylinder cover and refill brake fluid.

3) Actuate the brake handle, exhaust the air in the dead corner of the brake caliper.

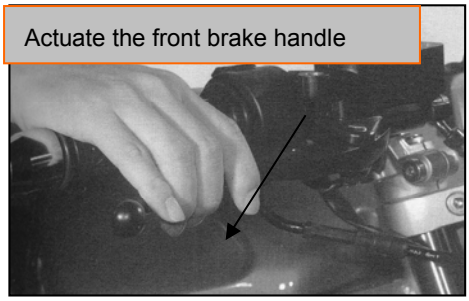


4) When the vacuum pump has fully exhausted the air inside the brake caliper, after the brake fluid is pumped out, firmly nip the handle or completely push down quickly screw the deflating valve bolt, with the torque being 7-9 N.m.

5) Mount the brake cylinder cover with the sealing gasket flattened, and replace with new sealing gasket as required.

6) After refilling, check the oil cup, hydraulic brake hose and all connecting pieces for leakage.

**Notice**

***1) The brake fluid shall be DOT 3 non-petroleum base brake fluid.***

***2) The brake fluid can't be mixed with other Impurities; otherwise the braking performance shall be reduced due to chemical change.***

**Caution**

***The brake fluid is strongly corrosive, never splash it onto the surfaces of sprays painted or plastic pieces; in case it splashes into the eyes or on the skin, immediately flush with large amounts of fresh water and see a doctor.***

## Brake piece checking

Operating brake, if the wears limit line of the brake shoe touch to the side of the brake disc. It shows that the brake shoe has touched the wear limit

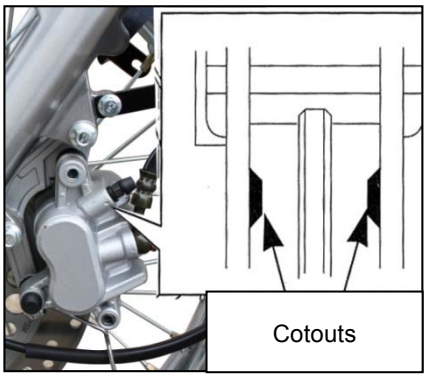


## Rear Brake

Pushing the brake pedal by hand, checking the resistance, to confirm the move of the brake pedal whether is good. If not, it could be adjusted by adjusting the rear brake adjustment nut. Twirling the nut to adjust the pedal stroke. Pushing the brake pedal by hand till feeling resistance . Validation the pedal free stroke whether is in the scope of regulations.

**Brake pedal free stroke：15-25mm**

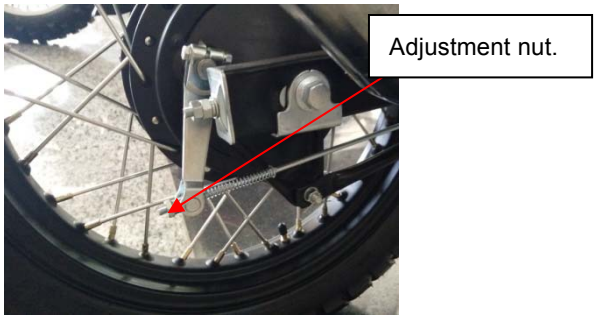


## The brake piece checking

（1）Pulling the rear brake, checking the wear and tear of the brake shoe. If the mark "△" on the drum brake cover and also on the brake cam alignment, shows the brake shoe has been touched the wear limit. Please change it.

（2）If it needs to be changed. Please go to the designated special maintenance station. And it is better to use the parts from our company.

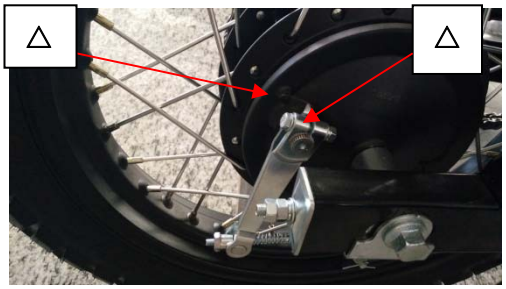


### ⚠ *Caution*

***Please change the brake shoe in time if it has touched the wear limit. Otherwise it would ca accidents by the lack of strength.***

## 10. Running system

Tire specifications and tire pressure

Check the tire pressure with a tire pressure gauge to see whether the pressure conforms to the recommended value.

Tire specifications and recommended tire pressure:

| specs | Front tire | Rear tire |
|---|---|---|
| | 90/90-19 | 130/70-18 |
| Cold tire air pressure | Front tire | Front tire |
| | 225kPa | 225kPa |

If the tire pressure can't reach the specified requirements, check the tire for cuts, embedded iron nail or other sharp articles.

### ⚠ Caution

**The tire pressure measured when the tire is cooled down shall be the correct tire pressure.**

## Spoke

Check the wheel for loosened or broken spokes.

Screw the loosened spokes to the specified torque with a spoke nut fastening tool S TOOL.The spoke nut torque: 2.45-4.0N.m.

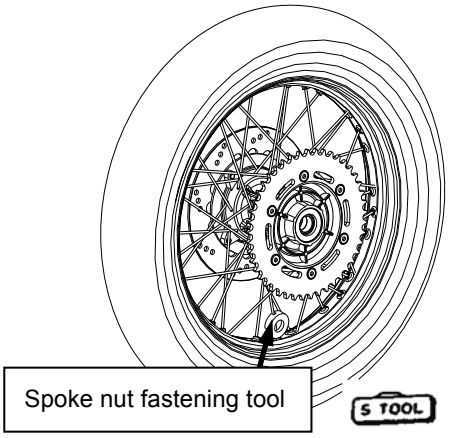

## 11. Clutch control line

Clutch is the key part of transmitting power in motorcycle transmission system，should adjust it according to the following overhauling content. The content is the free stroke of clutch control handle(general is 10-20mm)，some venial need adjust the adjusting screw of declutch mechanism.

Check the clutch operating handle free stroke. Clutch operating handle free stroke: 10-20mm.

Adjusting methods:

Fine adjustment: Pull open the rubber lagging, unscrew the retaining nut, and turn the adjusting nut to adjust to a satisfied free stroke. And then screw up the retaining nut and mount the protective rubber lagging.

If a satisfactory free stroke can't be achieved by fine adjustment, remove the clutch control line on the handle end to adjust the engine end.

**Adjusting methods:**

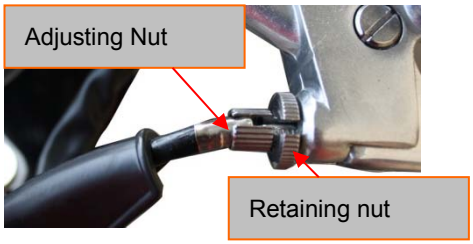


Coarse adjustment:

Remove the clutch control line on the handle end, and then remove the clutch operating arm on the engine end; turn the clutch operating arm by a proper angle and remount it, and then mount the clutch control line, finally adjust it to a satisfied free stroke according to the fine adjustment.

**protective rubber lagging**

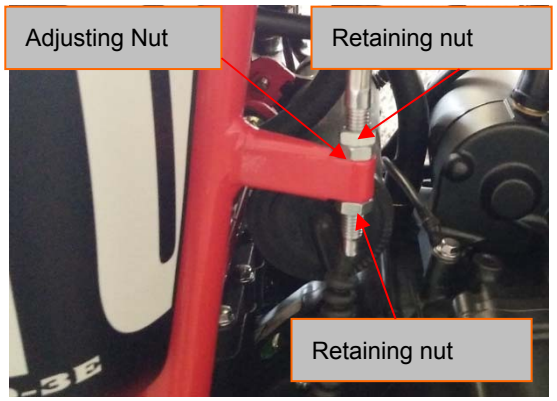


### ⚠ Notice:

***Always ensure the clutch operating handle has the proper free stroke! Being too loose will cause a failure of the clutch detachment, while being too tight will cause poor clutch engagement thus damaging the clutch***

## 12. Driving chain

**Driving chain tension inspection**

Park the motorcycle on level ground with main stand, and shift the transmission to the neutral position. Check the driving chain tension. Press the chain with a finger up and down to check the amount of movement of the lower chain.

Driving chain tension: 10-20mm.

If the chain is too loose or too tight, make adjustment.

Adjusting methods:

Unscrew the rear wheel spindle nut and turn the adjusting bolt on the chain adjuster until the specified tension is achieved,

and then fasten the rear wheel spindle nut, and check the flexibility for free rotation of the rear wheel and the consistency of the front and rear wheels.

**Adjusting methods:**

Unscrew the rear wheel spindle nut and turn the adjusting bolt on the chain adjuster until the specified tension is achieved, and then fasten the rear wheel spindle nut, and check the flexibility for free rotation of the rear wheel and the consistency of the front and rear wheels.

**Caution**

***The scale lines of the chain adjuster on both sides must be consistent with each other.***

**Warning**

***The rear wheel spindle nut must be firmly screwed up to the tightening torque of 40-50N.m.***

Inspect the abrasion of major / minor sprocket. In case of serious tooth abrasion, teeth missing or broken teeth, replace it.

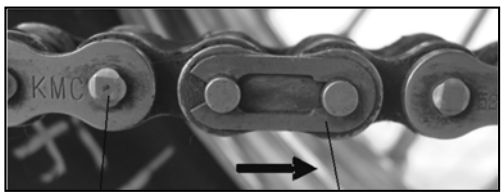


| | |
|---|---|
| Movement direction | Spring locking piece |

**Notice:**

***The scale lines of the chain adjuster on both sides must be consistent with each other.***

**Notice**

***This model uses the oil seal chain, so the selected washing oil shall be in corrosive to the oil seal; while assembling the chain, the locking piece coupling spindle shall be coated with appropriate amount of chain-specific lubricating oil.***

**Warning:**

***While mounting the spring locking pieces, its opening end shall be in the opposite direction with the normal movement of the driving chain.***

## 13. Battery Checking

The sealed battery does not require any maintenance. When electrolyte leaks, or other failure of the electrical system is detected, apply to the SHINERAY Dealer.

If the vehicle remains unused for long periods, it is recommended to disconnect the battery from the electrical system and store it in a dry place.

- After an intensive use of the battery, it is advisable to carry out a standard slow charging cycle.

- Quick charging is advised only in situations of extreme necessity since the life of lead elements is drastically reduced by such cycle.

Detach the panel from the bottom attachment by pulling it outwards.

Lift out the panel by unhooking it from the top hooks.

Clean away dust and corrosive from the surface of the battery.

Remove the negative, then the positive pole of the accumulator; unscrew and remove the loosen battery strap .The battery is free of maintenance. There is no need to check the electrolyte level. Clean the battery terminals regularly.

The condition of charging will significantly influence the life length of the battery.

Seriously corroded conductor connectors of the battery shall be replaced.

**To remove the battery**

Open the battery box，firstly disconnect the negative pole, then the positive pole. Remove the battery and replace with a new one (of the same type and specification), then connect the positive pole first and the negative pole last.

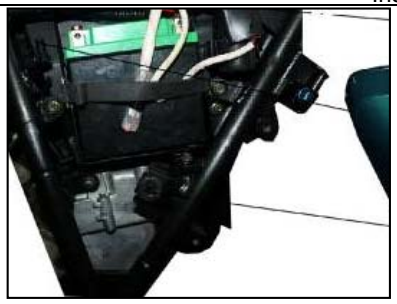

**Installation of battery**

Installation is in the reverse order of removal. While connecting the poles, connect the positive pole first.

**Charging the battery**

The battery is losing power every day, even if it is not used. Please disconnect the battery cord, and strictly follow the instruction in the operation manual while charging battery. The charging amperage and time of charging should not exceed the required standards. Charging at high amperage will negatively influence the life of the battery.

Please regularly use special charging devices to charge the maintenance free battery. You can also apply such device to test overload voltage, the stability of the battery. In addition, this charging device will avoid overcharging of the battery.

If you find the battery is out of charge when starting the motorcycle, please charge the battery as soon as possible. Battery will be damaged if it stands in a status of being uncharged for a long period.

⚠**Caution**

1) ***In this model, both the startup and EMS system are completely powered with accumulator. Therefore, it is quite important to ensure sufficient electric quantity of accumulator, otherwise, startup is impossible.***

2) ***Never fill in tap water, because this will shorten the accumulator's life span.***

3) ***To dismantle battery ,disconnect the negative(-)electrode before the positive(+)one, and vice versa in installation .Ensure against any contact of the positive(+)electrode with the vehicle body.***

4) ***Never have the electrolyte level come over the upper mark line when adding distilled water .Otherwise overflow and corrosion will occur.***

5) ***The electrolyte contains sulfuric acid and will cause serious hurt to skin and eyes by contact. In case of contact with it, wash it off for 5 minutes and see a doctor immediately.***

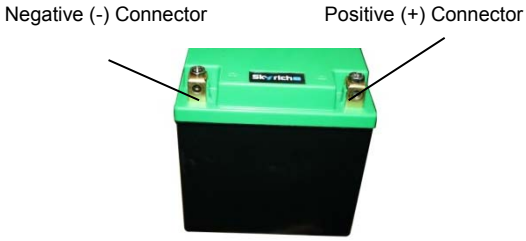


6) **Foreign matter should be prevented from entering into the battery during dismounting and installation.**

7) **The breathing pipe must be kept unblocked.**

## 14. Replacement of Fuse

Set the ignition switch to "OFF" position. The specified fuse tube of 15A/10A should be used for main fuse replacement, and a 10A fuse tube for FAI injection nozzle.

Open the left side cover, remove the fuse holder on the side of the battery and replace the fuse tube.

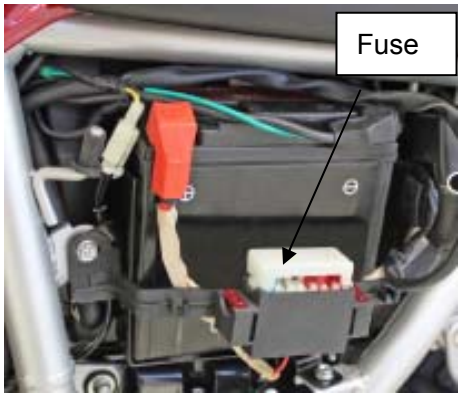


If the new fuse tube is broken again as soon as it is fitted on, it means that somewhere of the electric parts is shorted unexpectedly.

⚠ **Caution**

***Do not use any fuse over 15A/10A***

***Be sure not to wash the battery when washing the vehicle.***

## 15. Brake lamp adjustment

If the rear breaks lamps abnormally light up and go out, adjust it by turning the adjusting nut. If the rear brake lamp switch is broken, replace it immediately.

Pull down the right side cover

Pull out and pull off the patch plug of the rear brake lamp switch, and carefully pull out the rear brake lamp switch wire and remove the rear brake spring. Replace with new rear

brake lamp switch and mount it in the reverse order.

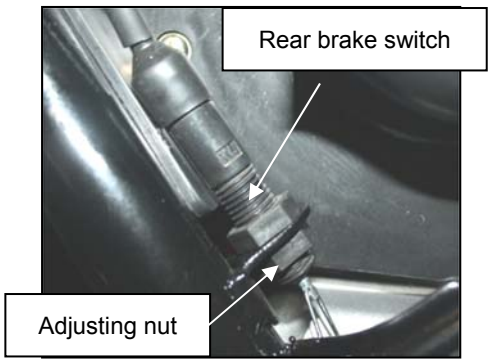


While installing, the wiring of the rear brake lamp shall be in strict accordance with the wiring diagram, and replace the buckle strip

While installing, the rear brake spring shall be reliably hooked with the pin hole on the rear brake lamp switch.

After replacement, adjustment shall still be carried out to the rear brake lamp switch.

## 16. Illumination signal system

**Headlamp dimming**

Before driving, check the brightness, direction, etc. of the headlamp.

The adjustment can be made to the headlamp in the left / right and vertical directions.

Loose the screw to disassemble the headlight.

Rotating , directly unplugging

Rotating and disassemble the bulb.

Install the new bulb in reverse order

Headlamp bulb specifications:12V55W/60W

Position lamp bulb specifications: 12V5W

**Turn signal light**

- ✧ Loosen the screws（1）, remove the lamp lampshade（2）
- ✧ Lightly press bulb（3）, rotate in counter-clockwise.
- ✧ Install new bulb in opposite order as below.
- ✧ Turn lamp bulb specifications:12V10W

**1 m)**

system) ABS.

Role is in the motorcycle braking, automatic control brake force size, the wheels cannot be locked, is in a state of piping side the slip (slip rate at around 20%), to ensure that the wheels and the ground adhesion at the maximum value

ABS by mounted on the wheel sensor signal that the wheels will be lock, the controller command the oil pressure regulator to reduce the wheel brake cylinder, decrease the Braking moment, after a certain period of time, to restore the original hydraulic, constantly such cycles per second (up to 5 ~ 10 times), always in a state of rotation and the wheel has the largest Braking torque.

## 18. Steering stem bearing

Lift the motorcycle with a jack or other support with the front wheel being apart from the ground surface, and check whether the steering handle can rotate freely; if the steering handle cannot rotate in balance, or has axial looseness or jamming, adjust the front fork stem adjusting nut.

## 19. Suspension system

**Front suspension**

Make the front brake in braking state and press the front fork bracket for several times, and check the front suspension for normal operation.

If abnormal noise or “Crack” sound is heard, check all the fasteners and screw them up to the specified torques.

**Rear shock absorber spring preload adjustment**

The rear shock absorber (1) spring preload can adjusted; to make the adjustment, operate as follows:

- Using an appropriate spanner, turn the ring nut (2) positioning the adjuster (3) in correspondence to the catch (4).

- For a softer adjustment, move the adjuster (3) towards position “1” and for a harder adjustment move it towards position “5”.

Standard adjustment is in position “2”.

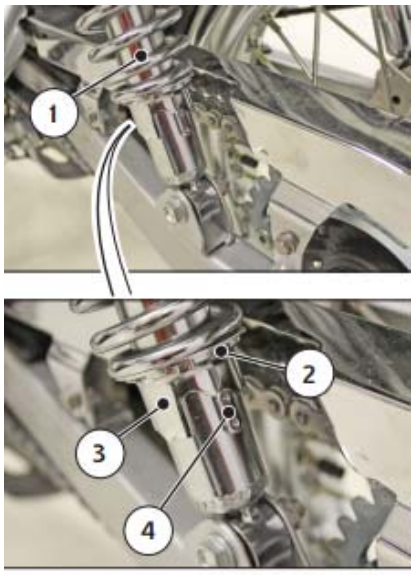


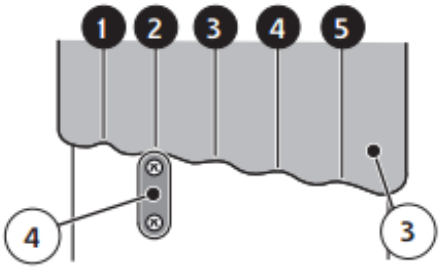


## 20. Bolts, nuts and fasteners

All the bolts, nuts and fasteners shall be screwed up as per the maintenance period table. And check all the cotter pins, safety gripping gears, locks, etc.

# 4. Fuel system

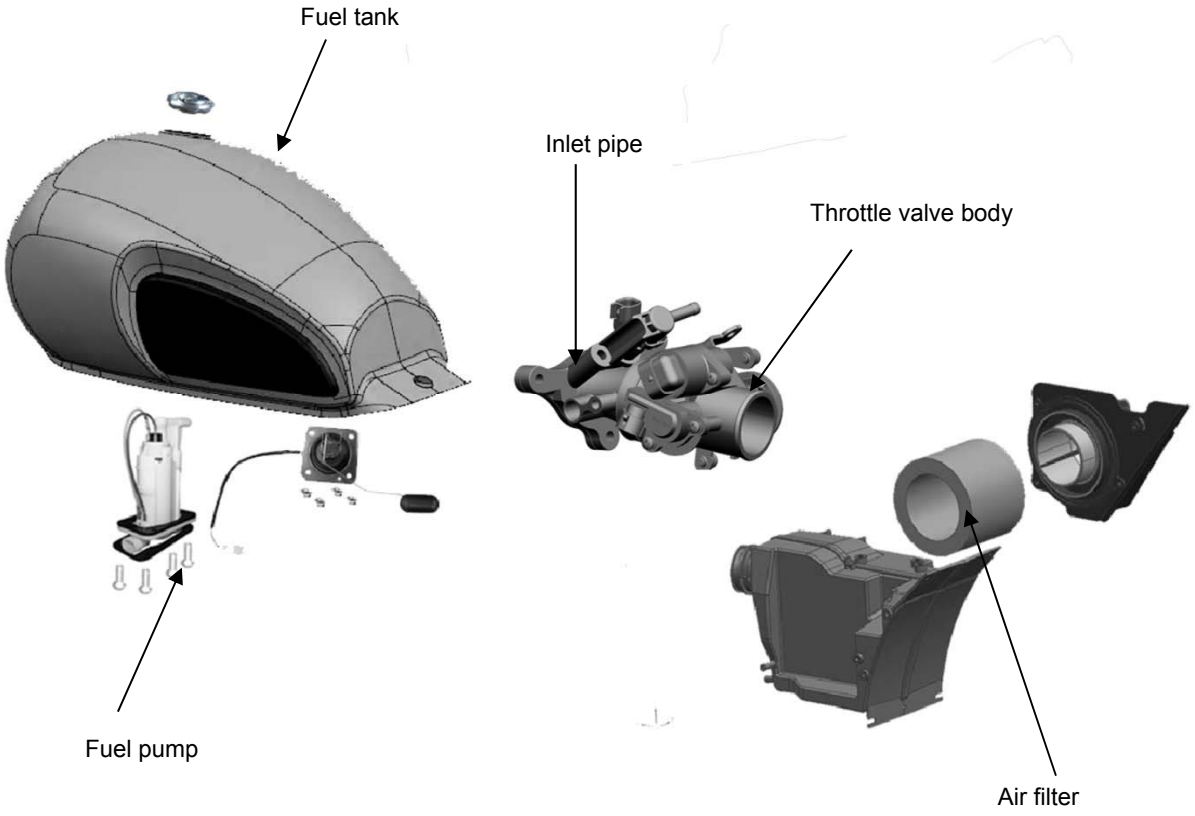

# Fuel system

| | |
|---|---|
| Maintenance notice | Disassembly and assembly of fuel tank |
| Troubleshooting | Removal and installation of air filter |
| Removal and installation of fuel tank | Removal and installation of carburetor |

## Maintenance notice

This section introduces the knowledge related to the fuel system.

**CAUTION**

- ***Pay special attention to fire prevention while dealing with gasoline!***

Take care of the mounting position of such sealing members as the O-ring while removing various parts of the fuel system. While reassembling, always use new sealing members such as an O-ring.

Technical specifications

| | |
|---|---|
| Throat opening diameter | **Φ40mm equivalent** |
| Idle speed | **1500r/min ± 50 r/min** |
| Throttle handle free stroke | **2～6mm** |

**Troubleshooting**

- Engine ignition is ok, but it does not start

1 No fuel or insufficient fuel in the fuel tank

2 Too much fuel enters the cylinder;

3 Air filter is clogged;

4 Spark plug fails;

5 Fuel tube does not flow well;

6 Fuel quality problem (containing moisture);

7 Fuel is stored too long;

8 Fuel pump failure;

9 Injector failure (clogged)

## Removal and installation of fuel tank

### Disassemble step

1. Turn off fuel tap and check it whether leak fuel.
2. Take off fuel tank lock to check it whether is damaged.
3. Remove the seat

4. Dismantle fixed bolt.

5. Loosen the tube clamp and pull off the fuel tube
6. Pull off the fuel pump control wire patch plug.

7. Remove the fuel tank.

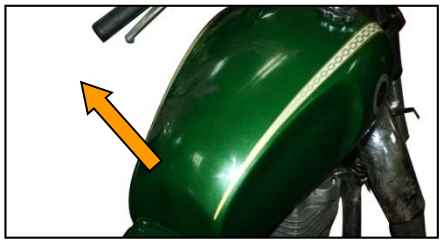

To avoid fuel line contamination, clog the joint with fireproof fabric after pulling off the fuel tube.

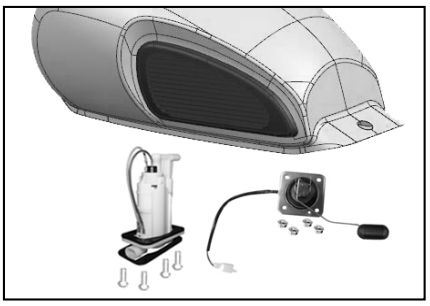

**Installation steps**

The installation procedures are the removal procedures in reverse order.

While installing, note that the wiring of the fuel pump control wire shall be in strict accordance with the wiring diagram.

Avoid fuel line contamination.

## Removal and installation of air filter

Take out the air filter and check if it is contaminated.

Disassemble:

Open and remove the right side cover,

Remove 4 screws(1), remove Air filter cover(2)

Remove the filter element(3) and check whether it is in normal condition. This is a paper filter element, of which the surface can be cleaned with compressed air; if the filter element is too dirty, broken or damaged, replace it;

While driving in a more dusty area, the time period for cleaning and replacing air filter element shall be shorter.

Keeping the cleanness of the air filter may improve the engine's operating efficiency and prolong its life span.

After cleaning or replacing filter element, reassemble the complete vehicle in the reverse order.

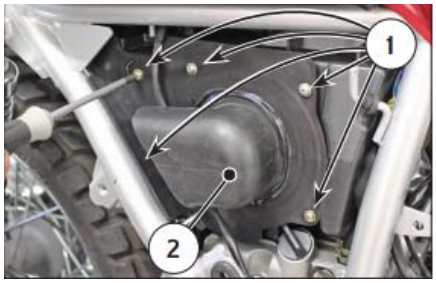

## Remove and installation of throttle body

**Disassemble step：**

1. Removal of rear wheel

2. **Removal o**f seat

3. Removal of fuel tank

4. Loosen inlet pipe clip;

5. Remove throttle body (including the fuel injector).

**Installation steps：**

The installation procedures are the removal procedures in reverse order. While installing, the locating slot must be aligned with the locating lobe of throttle body

**Warning:**

**Do not further disassemble the removed throttle body; in case several sensors on it need to be changed, proceed under the instruction of an EMS system technician.**

**Fuel filling**

- turn the engine off.

- move laterally, the lid (1) of the greenhouse culture.

- insert the key (2) and move it 1 / 4 turn in the direction of the arrow "A" to unlock the cap (3).

- turn the cap (3) counter clockwise and remove it from the tank.

introduction of fuel through the nozzle (4).。

- get back the cap (3) moving inversely to the actual removal, then remove the key (2) and move the lid (1) of the protection lock

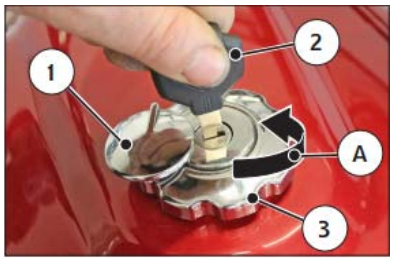

## Aintenance of Air Cleaner

| Component description | Damage form | Trouble symptom of motorcycle | Repair method |
|---|---|---|---|
| Air cleaner | Too much dust deposit in the filtering element. | The engine is difficult to start. Insufficient engine output; Poor performance of engine during idle run. Excessive fuel consumption. The exhaust muffler pipe fumes strongly (black). | Clean the filtering element. clean |
| | The filtering element is fractured or chipped | Engine air suction noise is too loud | Replace the filtering element |

# 5. Removal and installation of engine

# Removal and installation of engine

| | |
|---|---|
| Maintenance notice | Installation of engine |
| Removal of engine | |

## Maintenance notice

It is only necessary to remove the engine from the frame when performing maintenance on the engine's crankshaft, balancing shaft, driving parts, etc. It is unnecessary to remove the engine from the frame when performing maintenance on other parts of the engine.

Before removing the engine, park the motorcycle on level ground, and completely drain engine lubricating oil.

To maintain the heat engine parts including cylinder head, cylinder body, piston, etc., it is necessary to remove the coverings, fuel tank, throttle body, air filter assembly, etc.

To remove the engine's right crankcase cover for maintenance, it is necessary to remove the rear brake pedal

To remove the engine's left front cover for maintenance, it is necessary to remove the gear shift pedal, left rear cover, etc.

Installation is in the reverse order of removal.

While reinstalling, all wirings shall be carried out in accordance with the wiring diagram, and replace the removed buckle strip

**Specification**

| | |
|---|---|
| **Net weight of engine** | **40kg** |
| **Engine oil volume** | **2.2L** |

**Key torque values**

| | |
|---|---|
| **Engine hanging bolt** | **M8: 20-30N.m** |
| | **M10: 30-40N.m** |
| **Rear fork shaft** | **60-70N.m** |

## Removal of engine

1. Park the motorcycle on the plane ground, and completely drain the engine lubricating oil.

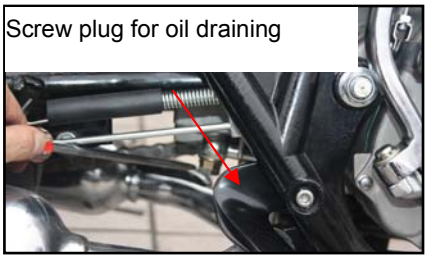


2. Remove oil -out line and oil -in line

3. Remove side cover, seat and fuel tank

4. Remove muffler

- Remove oxygen sensor

- Remove muffler barrel body

- Remove the exhaust pipe

5. Remove engine cycle tube

6. Remove Left /Right cylinder head connecting pipe

7. Detach the earth wire from the negative pole of the battery.

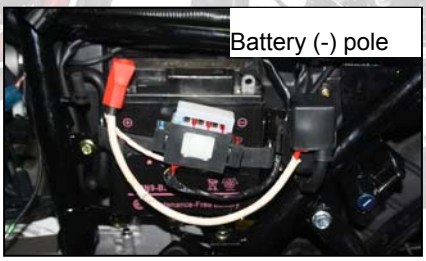


8. Remove clutch cable

9. Remove the starting motor wire.

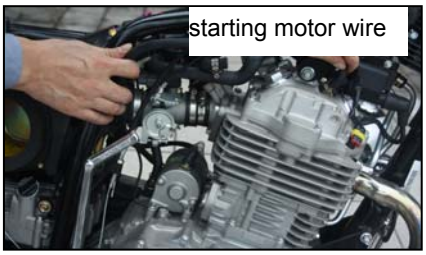


10. Remove the high voltage wire

11. Remove the magnetic motor, gear display line and hit the line wire

12. Remove the gear shift pedal and left rear cover.

13. To remove the rear brake pedal

14. Pull off the engine sensor connector.

15. Remove the inlet pipe connected to the engine bolt

16. Remove the engine hanging plate.

- Upper suspension

- Front suspension

17. To take out the rear fork shaft and move the rear fork backwards:

- Remove the drive chain

- Remove the rear absorber and rear fork connecting bolt;
- Unscrew the nut and take out the rear fork shaft;

- Take out the rear fork backwards

- Loosen the nut and remove the lower hanging bolt.

- Move the engine slowly from the right.

## Installation of engine

The installation of engine is in the reverse order of removal of engine.

During installation, note that the wiring of cable shall be in strict accordance with the wiring diagram.

Remove the 4 engine bracket and the frame connecting bolt

Remove the 2 front suspension bolt

Remove the 2 rear suspension bolt

Remove the drive chain

Move the engine slowly from the right.

# 6. Cylinder head, cylinder and piston

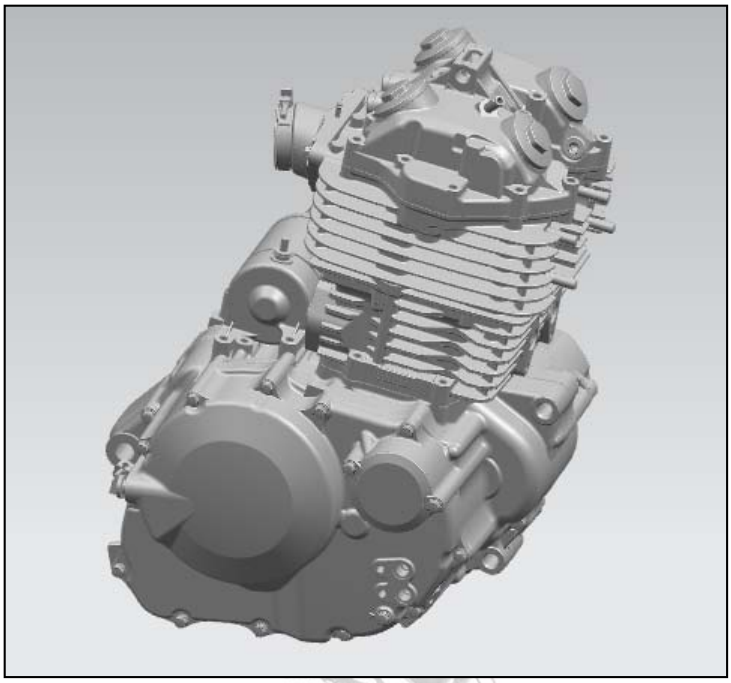

Cylinder head cover

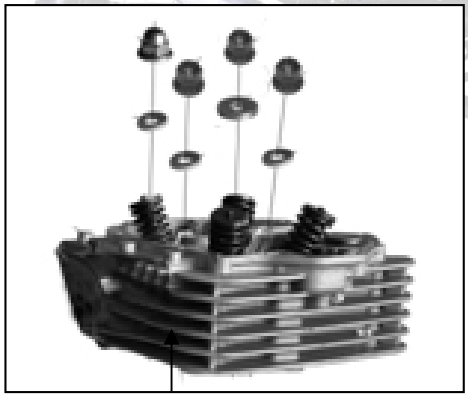

Cylinder head

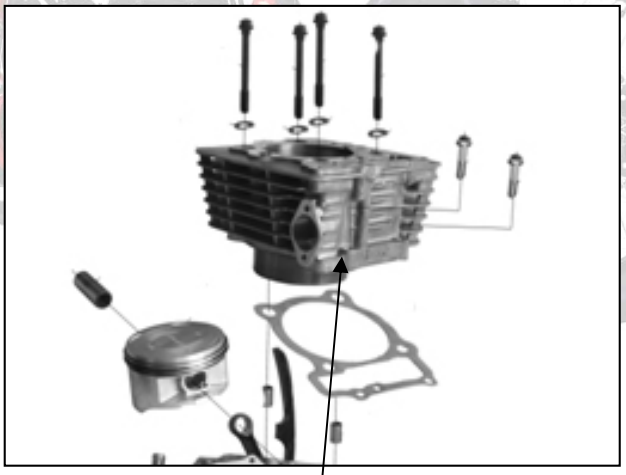

Cylinder

# Cylinder head, cylinder and piston


| | |
|---|---|
| Maintenance notice | Cylinder head |
| Troubleshooting | Cylinder |
| Cylinder head cover | Piston |
| Camshaft | |


## Maintenance notice

The lubrication of the camshaft and rocker arm is implemented by pumping oil by the oil pump through the oil troughs of the cylinder, cylinder head and cylinder head cover; before assembling, please check whether the oil troughs are unobstructed and clean them up properly.

Before assembling, clean all parts and components with cleaning agent and dry them with compressed air.

While assembling, coat engine oil and molybdenum disulfide lubricant on the protruding surface of the camshaft for preliminary lubrication.

Be careful not to damage the cylinder wall and piston.

**Technical specifications & maintenance benchmark**

| Item | | Standard value | Maintenance limit value |
|---|---|---|---|
| Camshaft | Camshaft lift: IN | 5.5057 mm | 5.3057mm |
| | Camshaft lift: EX | 5.515mm | 5.315mm |
| Cylinder head | Planeness | 0.03 | 0.05mm |
| Valve spring | Internal spring free length | 36.7mm | 35.8mm |
| | External spring free length | 43mm | 41.89mm |
| Valve | IN Valve stem external diameter | φ5.49mm～φ5.475mm | φ5.455mm |
| | Conduit inner diameter | φ5.5mm～φ5.512mm | φ5.53mm |
| | EX Valve stem external diameter | φ5.46mm～φ5.445mm | φ5.415mm |
| | Conduit inner diameter: | φ5.5mm～φ5.512mm | φ5.53mm |
| Valve clearance | IN | 0.08mm～0.10mm | / |
| | EX | 0.10mm～0.12mm | / |
| Cylinder | Internal diameter | φ85mm～φ85.01mm | φ85.1mm |
| | Roundness | / | 0.05 |
| | Cylindricity | / | 0.05 |

| | | | |
|---|---|---|---|
| | Top planeness | / | 0.05 |
| Piston and piston pin | Piston external diameter | φ84.937mm～φ84.927mm | φ84.92mm |
| | Fit clearance with cylinder | 0.01mm～0.45mm | 0.1mm |
| | Piston pin external diameter | φ20mm～φ19.994mm | φ19.98mm |
| | Piston pin hole inside diameter | φ20.002mm～φ20.010mm | φ20.05mm |
| | Fit clearance | 0.002mm～0.018mm | 0.05mm |
| Connecting rod small end | Internal diameter | φ20.03mm～φ20.038mm | φ20.06mm |
| | Clearance with piston pin | 0.03mm～0.044mm | 0.07mm |
| Piston ring | First ring gap clearance | 0.2mm～0.35mm | 0.65mm |
| | Second ring gap clearance | 0.35mm～0.55mm | 0.7mm |
| | First ring side clearance | 0.02mm～0.06mm | 0.12mm |
| | Second ring side clearance | 0.02mm～0.06mm | 0.12mm |
| | Oil ring side clearance | 0.04mm～0.16mm | 0.4mm |

**Key torque values**

Cylinder head cover connecting bolt 8-12 N.m

Cylinder bolt 40-50 N.m

Timing driven sprocket bolt 8-12 N.m

Spark plug 18-25 N.m

Pensioner plate fastening bolt 8-12 N.m

## Troubleshooting

- Low cylinder pressure

1) Valve:

--Incorrect valve clearance adjusted;

--Valve ablated or bent;

--Valve sealing failure;

--Incorrect valve timing;

--Valve spring damaged.

2) Cylinder head:

--Spark plug sealing failure;

--Cylinder head gasket leaked or damaged;

--Cylinder head cracked or blistered.

3) Cylinder and piston:

--Piston ring clearance too big or cracked;

--Piston cracked or damaged;

--Cylinder / piston ring worn.

- Black smoke from exhaust

1) Valve guide worn;

2) Oil shield leaked or damaged;

3) Cylinder / piston / piston ring worn;

4) Piston ring clearance too big;

5) Piston ring incorrectly installed;

6) Piston or cylinder wall scratched or scuffed.

- Excessive noise

1) Incorrect valve adjustment;

2) Valve jammed or valve spring broken;

3) Camshaft worn or damaged;

4) Timing chain too long, worn or damaged;

5) Timing chain tensioned failure;

6) Timing driven sprocket worn;

7) Cylinder / piston worn;

8) Rocker arm / Rocker-arm shaft worn;

9) Piston pin bore / piston pin worn.

- Overheat / knocking (cylinder pressure too high)

1) Too much carbon deposited in combustion chamber.

## Cylinder head cover

**To remove the cylinder head cover:**

1) Remove the lower / upper eyehole covers and turn the crankshaft so that the piston is at the upper dead point of the compression stroke.

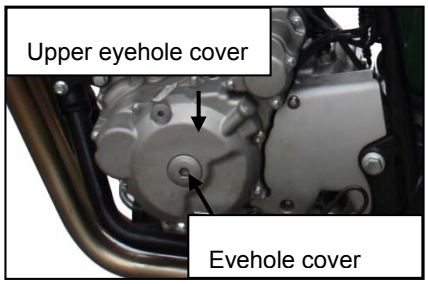


2) Remove the valve cover, connecting bolt, etc.

3) Remove the cylinder head connecting bolt.

4) Remove the cylinder head cover.

⚠ **Caution**

***Do not drop the location pin into the crankcase.***

## To mount the cylinder head cover:

1) Turn the crankshaft so that the piston is at the upper dead point of the compression stroke.

2) Remember to confirm the location pin.

3) Mount the cylinder head cover and the sealing gasket.

4) Mount the cylinder head connecting bolt. ; tightening torque is 12N.m

5) Confirm the valve clearance, and make adjustment with a valve clearance adjusting tool as required.

6) Mount the valve cover, etc

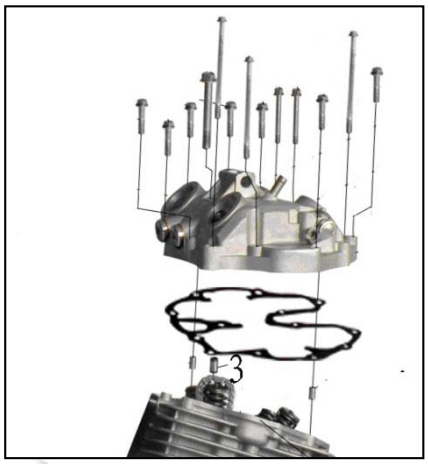

7) Connect the phase sensor and mount the eyehole cover and upper eyehole cover in turn.

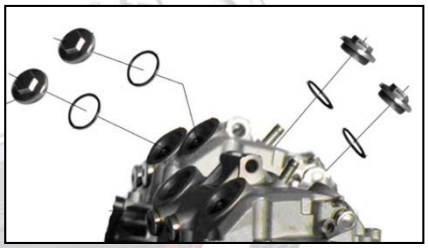

## Camshaft

**To remove the camshaft:**

1) Remove the lower / upper eyehole cover and turn the crankshaft so that the piston is at the upper dead point of the compression stroke.

2) Remove the cylinder head cover (See Removal of cylinder head cover).

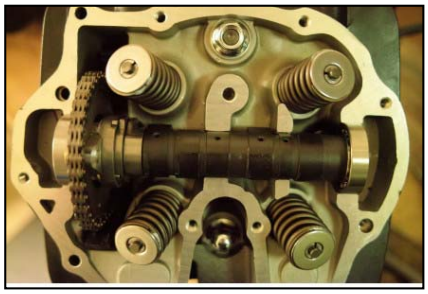

3) Remove the camshaft end cover, loosen the screw and washer at the tail end of the tensioner; turn the screw clockwise with the tensioner locking key

so that the tensioner is loosened and locked.

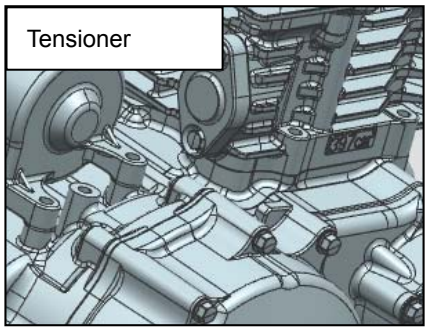


4) Remove the timing driven sprocket bolt

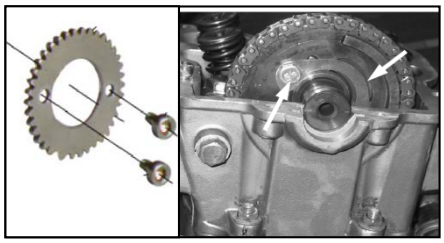

5) Remove the camshaft retaining pins

6) Remove the camshaft bearing

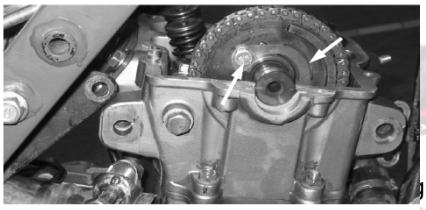

7) g driven sprocket, and remove the timing driven sprocket.

8) Remove the camshaft

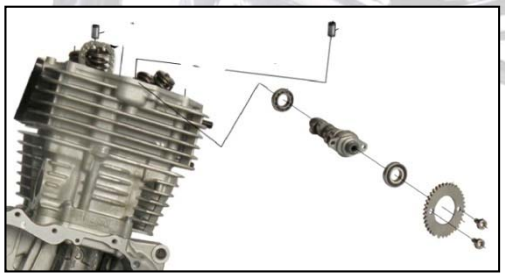

⚠**Caution**

**Do not drop the timing chain into the crankcase.**

**To mount the camshaft:**

1) Turn the crankshaft so that the piston is at the upper dead point of the compression stroke and the scale line “I” on the rotor is aligned with the triangular indication mark on the left front cover.

2) Clean all parts and components, coat the mixture of engine oil and molybdenum disulfide on the protruding surface of the camshaft, and coat oil engine on the journal part.

3) Mount the camshaft retaining pins, camshaft ，camshaft bearings and timing driven sprocket; let the basic circle part of the camshaft facing up while timing.

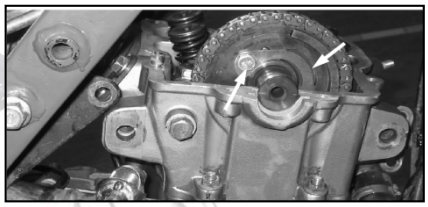

Engine oil and molybdenum disulfide

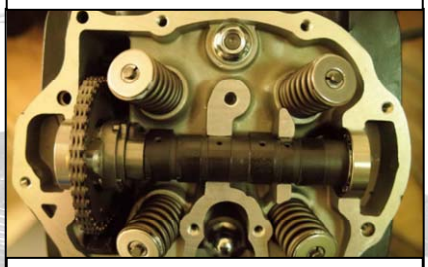

With the basic circle facing up

4) After properly timing, pull off the tensioner locking key and coat the mixture of engine oil and molybdenum disulfide on the tensioner to make it tensioned; mount the sprocket retaining plate and retaining bolt

5) Mount the bolt and washer at the tail end of the tensioner.

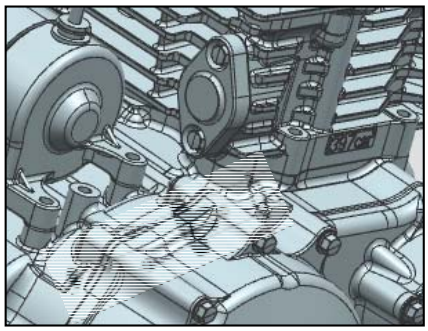

6) Mount the cylinder head cover (See Installation of

cylinder head cover), and adjust the valve clearance

7) Connect the phase sensor and mount the eyehole cover and upper eyehole cover in turn.

⚠**Caution**

***When the tensioner is not tensioned, never turn the crankshaft for fear of interlocking the teeth while timing.***

## Camshaft inspection

Check the camshaft for abrasion, damage, oil through jamming, etc. and check whether the decompressor flying block can rotate and return smoothly.

Measure the maximum IN / EX lift.

Maintenance limit: IN⩾⩾5.5057mm, EX ⩾ 5.515mm

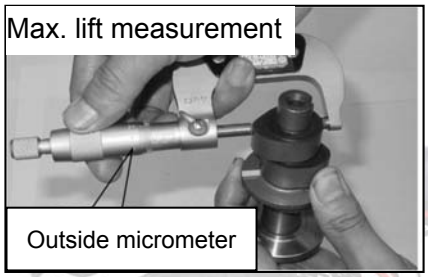

## Cylinder head

**To remove the cylinder head:**

1) Remove the muffler exhaust pipe

2) Remove the engine cycle tube

3) Remove Left /Right cylinder head connecting pipe

4) Pull off the spark plug cap,

5) Unclamp the inlet pipe clip and remove the cylinder head hanging bolt.

6) Remove the cylinder bolt and washer.

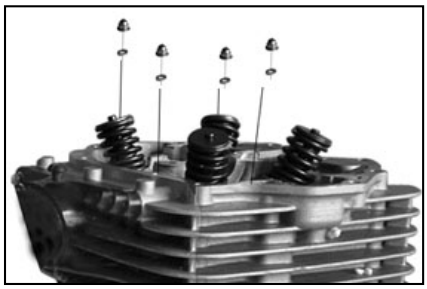

7) Remove the cylinder head and cylinder head gasket.

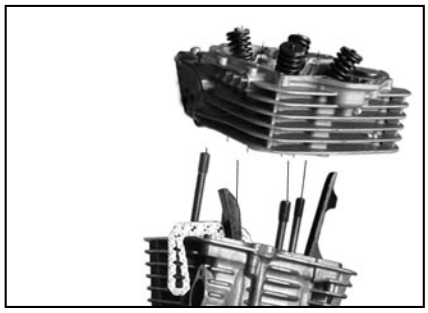

**Caution**

***Do not drop the location pin into the crankcase.***

**To mount the cylinder head:**

Installation is in the reverse order of removal. Precautions for installation:

1) Confirm the location pin; clean all parts and components, and check whether the cylinder head oil through is unobstructed, clean and free of leak.
2) Replace new cylinder head gasket
3) The tightening torque of cylinder bolt is 45N.m.

**Warning:**

***The cylinder head bolt must be fully screwed up to the tightening torque of 45N.m, and carry out 100% torque inspection.***

**Disassembly and assembly of cylinder head**

Disassemble and assemble the cylinder head according to the following diagram.

Use the valve remover / replacer S TOOL to remove and mount the intake valve and exhaust valve.

The spark plug must be tightened to the specified tightening torque of 15～20N.m for fear of leak.

While mounting the intake / exhaust valve, coat the mixture of engine oil and molybdenum disulfide on valve stem for preliminary lubrication.

While mounting the stud, please use specified thread retaining adhesive.

While mounting the valve spring, let the sparse end face up.

⚠**Notice:**

***Do not damage the oil shield lip while mounting.***

***The valve lock clamp must be mounted in place; dropout of the valve lock clamp is dangerous.***

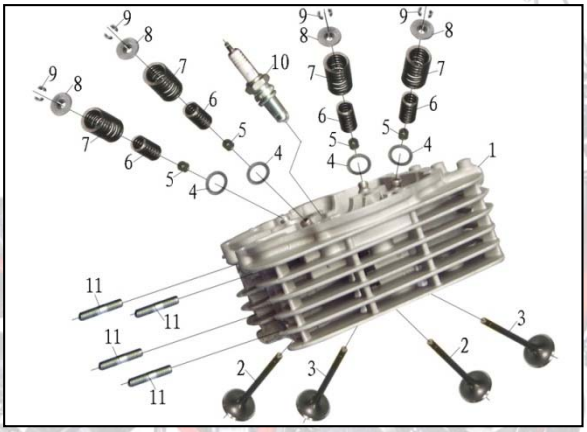


| No. | Procedure | Quantity | Remarks |
|---|---|---|---|
| 1 | Cylinder head | 1 | |
| 2 | Exhaust Valve | 2 | Coat the mixture of engine oil and molybdenum disulfide on the stem while assembling |
| 3 | Intake valve | 2 | Coat the mixture of engine oil and molybdenum disulfide on the stem while assembling |
| 4 | Outer spring seat | 4 | |
| 5 | Oil stem seal | 4 | Assemble with sparse end facing up |
| 6 | Valve inner spring | 4 | Assemble with sparse end facing up |
| 7 | Valve outer spring | 4 | Assemble with sparse end facing up |
| 8 | Upper spring holder | 4 | Replace it with a new one as required |
| 9 | Valve cotter | 8 | |
| 10 | Spark Plug | 1 | Replace it with a new one as required Tightening torque 18-25N.m. |
| 11 | Stud Bolt M8×38 | 4 | Use thread retaining adhesive while assembling Tightening torque 8-12N.m. |

## Cylinder head inspection

Check whether the cylinder head is unobstructed, clean and free of leaks; check the cylinder head's spark plug hole and valve seat for cracks; insert the valve into the valve guide bore and move it up and down to check its movement; sway it back and forth and left and right to see whether there is significant sloshing.

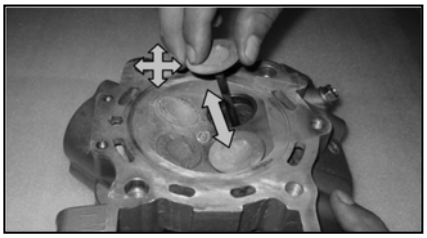

Check the cylinder head for deformation, and use the edge ruler and clearance gauge to inspect the planeness of the cylinder's joining surface.

Maintenance limit: ≤0.05mm.

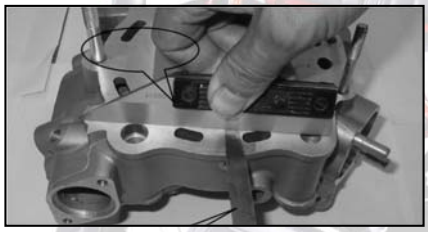

Measure the valve guide aperture.

Maintenance limit: ≤ φ4.53mm

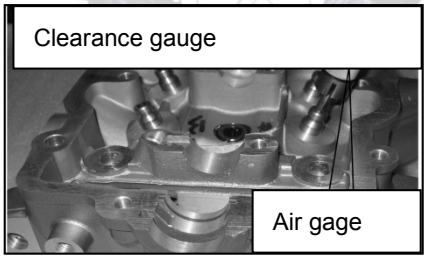


Measure the valve stem diameter.

Maintenance limit: IN≥ φ5.475mm,

EX ≥ φ5.445mm

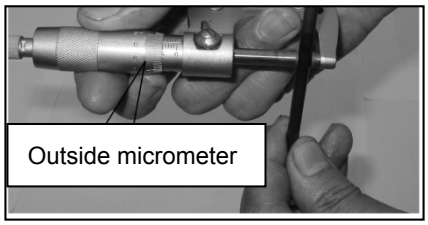


Measure the width of the valve contacting surface.

Maintenance limit: ≤1.7mm

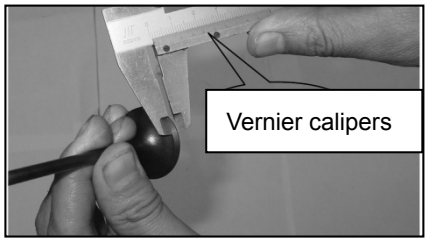


Measure the free length of the valve spring

Maintenance limit: Internal spring≥35.00mm

External spring ≥ 42.00mm.

Calculate the clearance between the valve stem and valve guide

Maintenance limit: IN≥0.09mm,

EX ≥0.10mm.

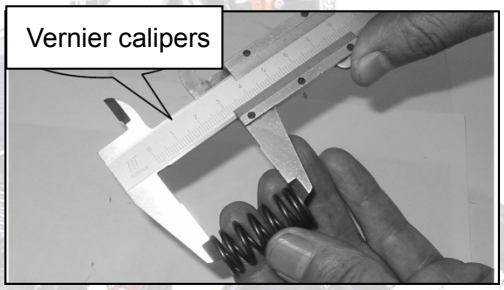


## Cylinder

**To remove the cylinder:**

1) Remove the cylinder head cover (See Removal of cylinder head cover)
2) Remove the camshaft (See Removal of camshaft);
3) Remove the cylinder head (See Removal of cylinder head)
4) Remove the chain slide;
5) Remove cylinder connecting bolt
6) Remove the tensioner
7) Remove the cylinder; remove the cylinder gasket.

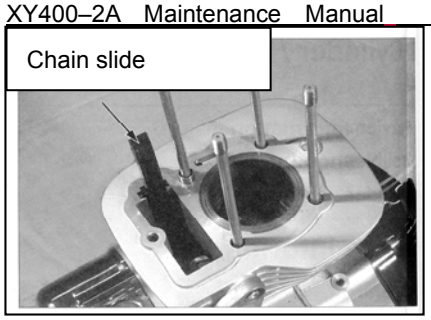


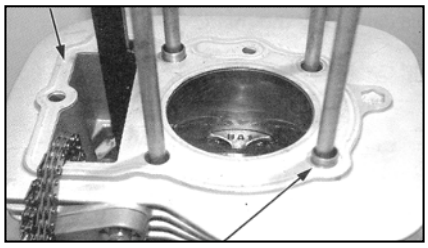

⚠**Notice:**

***Do not drop the location pin into the crankcase.***

***Do not bruise the cylinder wall.***

**To mount the cylinder :**

Installation is in the reverse order of removal. Precautions for installation:

1) Confirm the location pin; clean all parts and components, and check whether the cylinder oil through is unobstructed, clean and free of leak
2) Replace a new cylinder gasket, and confirm the notch direction of the piston ring; mount the cylinder after fastening the piston with the piston slide gage seat

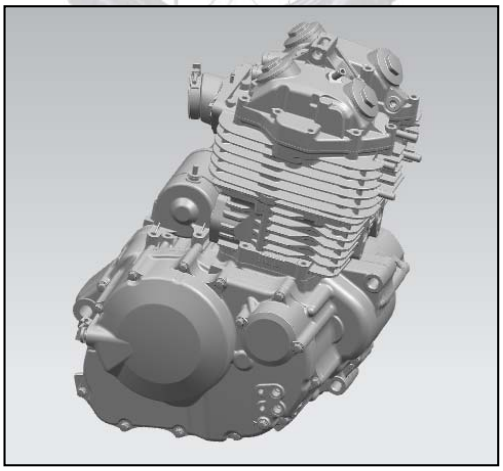

## Cylinder inspection

Check the cylinder for abrasion or damage, and check the cylinder wall for scratch.

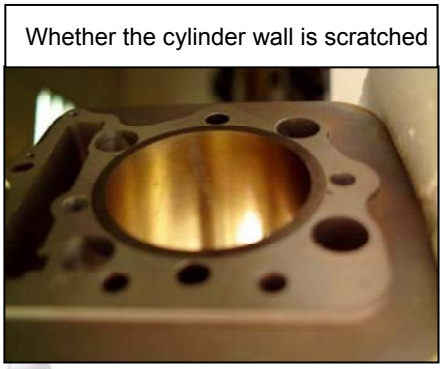


Check the cylinder wall for deformation, and use the edge ruler and clearance gauge to inspect the planeness of the cylinder's joining surface.

Maintenance limit: ≤0.05mm.

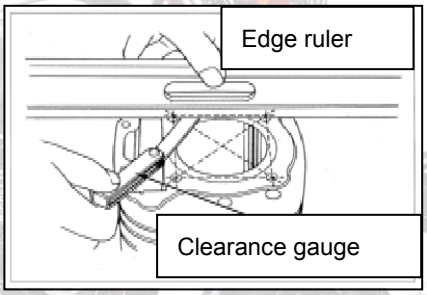


Measure the cylinder internal diameter. The measurement shall be made at three positions: top, middle and bottom, measure in two crossing directions for each position, and finally calculate their mean value.

Maintenance limit: ≤ Φ85.10mm

Work out the Cylinder's grade slope.

Maintenance limit: ≤0.05mm

Work out the Cylinder's roundness.

Maintenance limit: ≤0.05mm

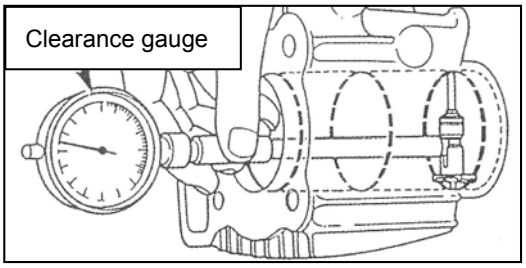

## Piston

**To remove the piston:**

1) Remove the cylinder head cover (See Removal of cylinder head cover)
2) Remove the camshaft (See Removal of camshaft).
3) Remove the cylinder head (See Removal of cylinder head).
4) Remove the cylinder (See Removal of cylinder)
5) Remove the piston pin retainer at one side, and pull out the piston pin.
6) Take out the piston.

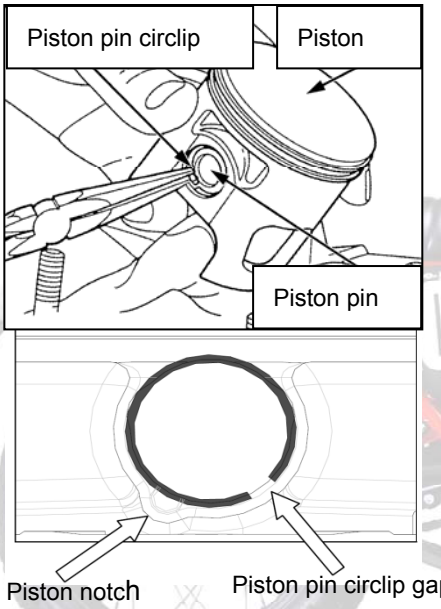


### ⚠ Notice:

***Do not drop the piston pin retainer into the crankcase.***

**To mount the piston pin:**

1) Coat engine oil on the piston pin surface and let the oil go through the piston and the small end bore of the crankshaft link rod.
2) Mount the new piston pin retainer, with the gap staggering the piston gap by more than 15° as shown in the above.
3) Mount the cylinder (See Installation of cylinder).
4) Mount the cylinder head (See Installation of cylinder head);
5) Mount the camshaft (See Installation of camshaft).
6) Mount the cylinder head cover (See Installation of cylinder head cover).

**⚠ Notice:**

***Assemble the piston with the top side with the marker "O" facing exhaust side.***

***Do not drop the piston pin retainer into the crankcase.***

**Disassembly and assembly of piston:**

Disassemble and assemble piston according to the following diagram.

While assembling, let the side with marker face the top of piston; if the marker can not be clearly identified, judge according to the shape of the piston ring (as shown in the figure below). Stagger the piston ring gap by more than 120º

While assembling the oil ring, mount the corrugated ring first, then mount the lip rings at both sides, with the corrugated ring joint staggering with both lip rings by 90°, and with the two lip rings staggering with each other by 180°

The piston pin retainer shall be replaced with new one while assembling after disassembling, and stagger the gap and the piston notch by more than 15°.

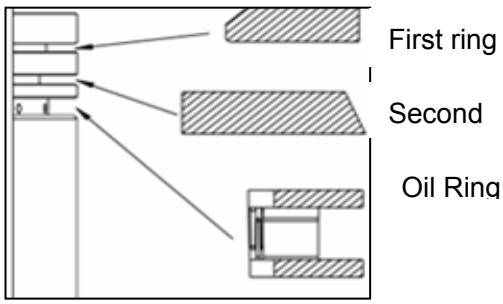

⚠ **Notice:**

***Do not damage the piston pin and piston ring.***

***Do not reverse the mounting position of the first ring (ATG marker) and second ring (A marker).***

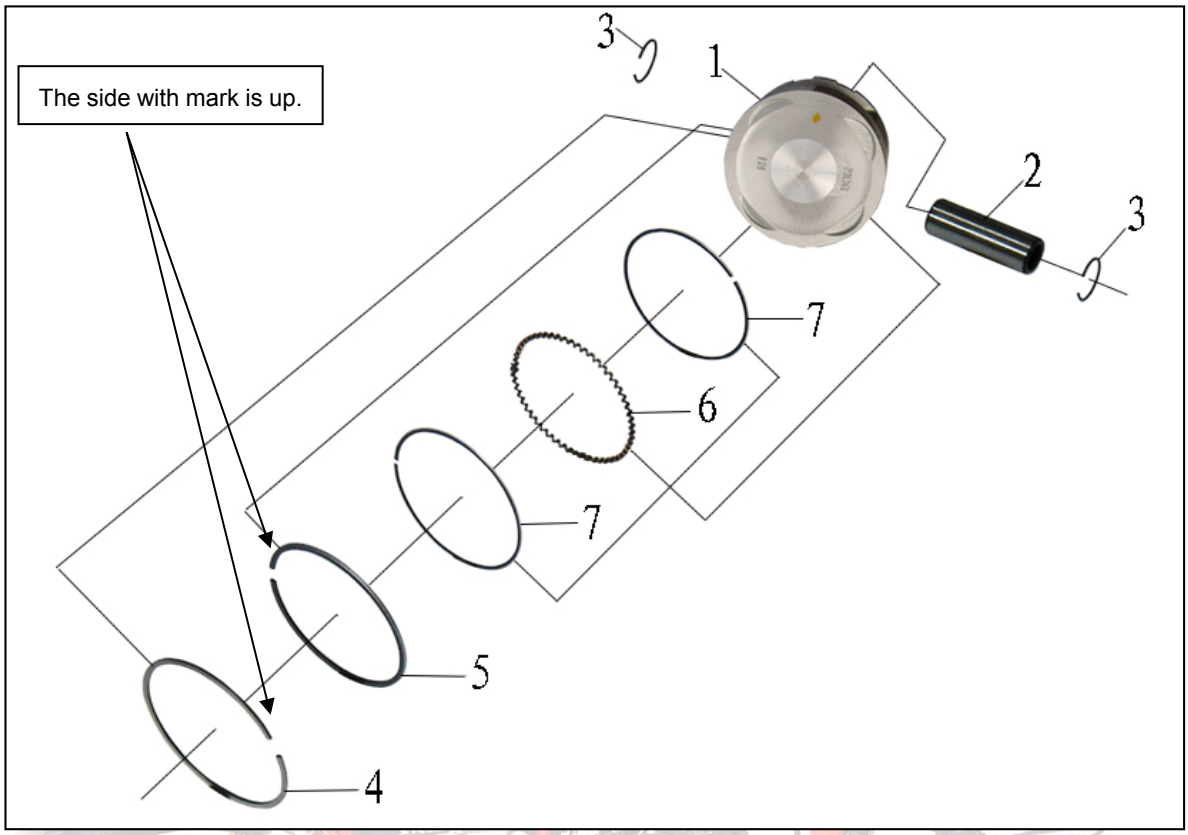


| No | Procedure | Quantity | Remarks |
|---|---|---|---|
| | Sequence of disassembling | | Assembling is in the reverse order of disassembling. |
| 1 | Piston | 1 | |
| 2 | Piston pin | 1 | |
| 3 | Piston pin circlip | 2 | Replace it with a new one while assembling |
| 4 | First ring | 1 | |
| 5 | Second ring | 1 | |
| 6 | wave ring | 1 | |
| 7 | Lip ring | 2 | |

## Piston inspection

Check the piston for abrasion or damage, cracks, etc. and check the skirt section for scratch.

Measure the piston external diameter at the position 10mm above the piston skirt.

Maintenance limit: ≥ϕ84.87mm

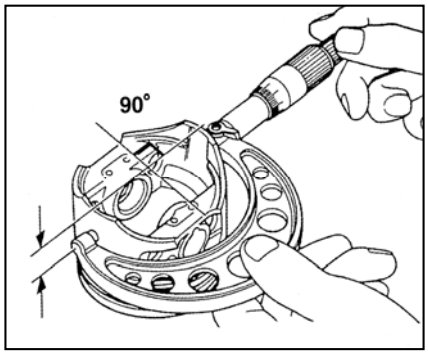


Measure the piston pin hole inside diameter.

Maintenance limit: ≤ϕ20.05mm.

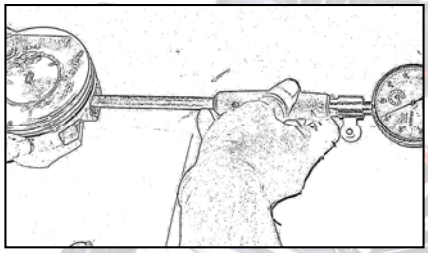

Measure the clearance between the piston ring and the piston groove before removing the piston ring.

Maintenance limit: First ring / Second ring≤0.12mm, Oil ring ≤0.40mm.

Mount the piston rings into the cylinder respectively and measure the gap clearance. Maintenance limit: First ring≤ 0.65mm, Second spring ≤0.7mm.

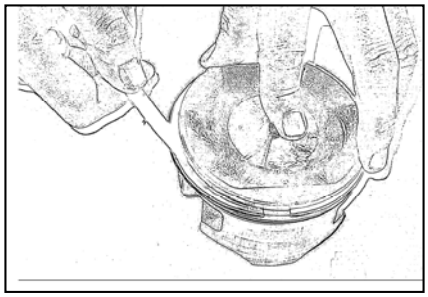

Measure the piston pin external diameter.

Clearance gauge

Maintenance limit: ≥ϕ19.98mm

Work out the clearance between the cylinder and piston.

Maintenance limit: ≤0.10mm.

Work out the clearance between the piston and piston pin.

Maintenance limit: ≤0.07mm.

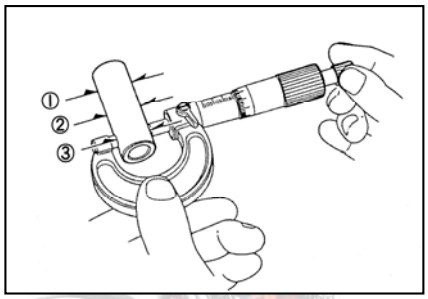

# 7. Clutch and Right crankcase cover

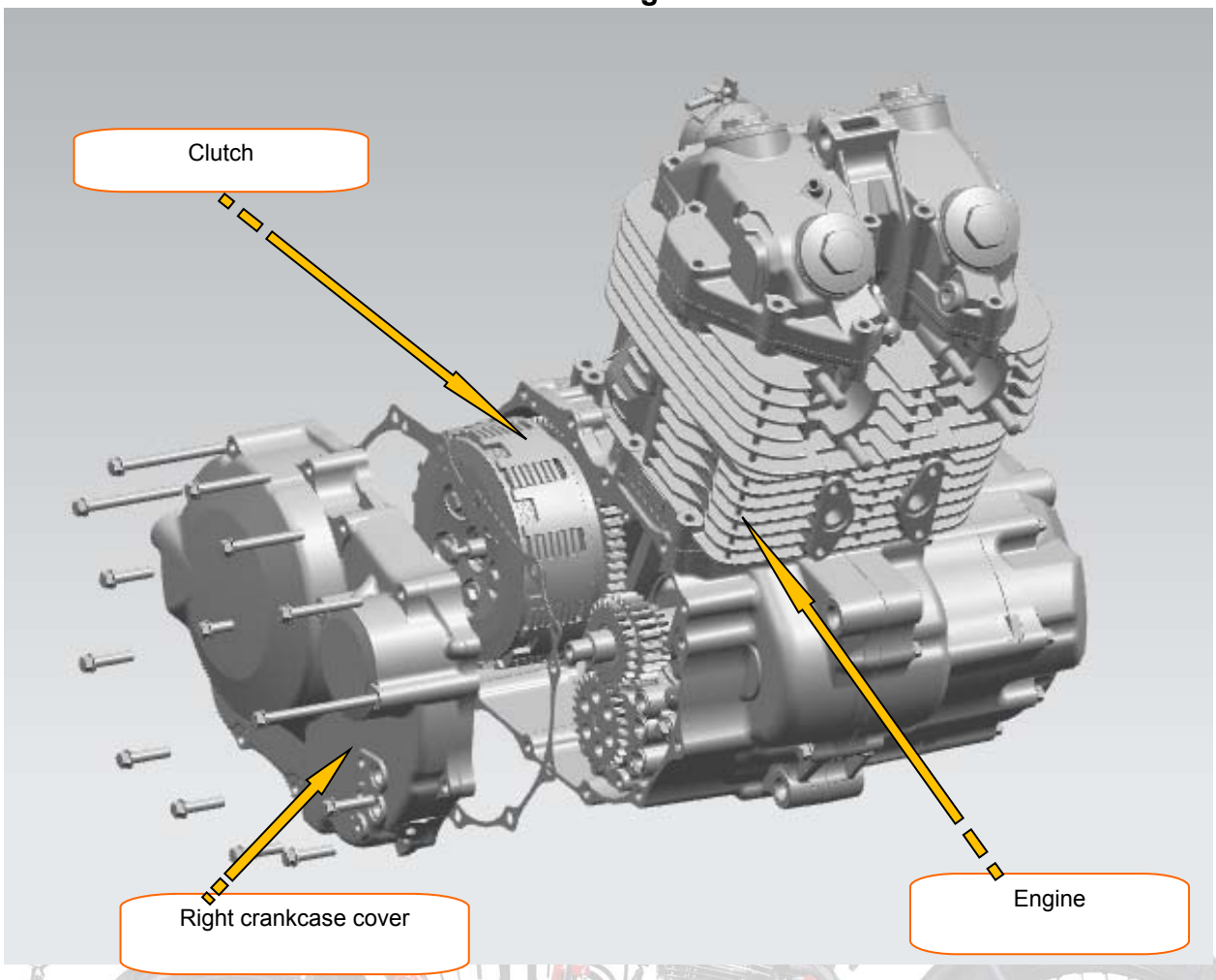

# Clutch and Right crankcase cover

| | |
|---|---|
| Maintenance notice | Clutch |
| Trouble shooting | Right crankcase cover |

## Maintenance notice

To carry out the maintenance stated herein, it is unnecessary to detach the engine from the frame. However, the engine lubricating oil must be discharged.

Remove the protecting shield, and loosen the rear brake cylinder body, rear brake lamp switch and spring and rear brake return spring, and then pull out the rear brake pedal.

Before assembling, clean all parts and components with cleaning agent and dry them with compressed air.

To assemble the clutch, loosen the clutch spring and coat engine oil on the clutch disc; in case of replacing new clutch, the clutch disc must be soaked in oil for over 24 hours before being assembled.

Be careful not to damage the crankshaft seal on the right crankcase cover.

**Technical specifications & maintenance benchmark**

| Item | | Standard value | Maintenance limit value |
|---|---|---|---|
| Clutch | Handle free stroke | 10～20 | / |
| | Spring free length | 39.74 | 38.7 |
| | Disc thickness | 3.0 | 2.8 |
| | Disc planeness | / | / |
| | Clutch plate thickness | 1.4 | / |
| | Clutch plate planeness | 0.10 | 0.20 |

**Key torque values**

| | |
|---|---|
| Clutch retaining nut | 114-126N.m |
| Primary driving gear fastening nut | 143-157N.m |
| Clutch lift plate fastening nut | 8-12N.m |

## Troubleshooting

- **Clutch**

In case of clutch operation failure, a better correction may usually achieved by adjusting the clutch handle free stroke.

- **Clutch slipping while accelerating**

  1) Insufficient free stroke;
  2) Clutch disc abrasion;
  3) Clutch plate deformed or bent;
  4) Clutch spring failure.

- **Excessive handle pressure**

  1) Clutch cable galling, damaged or dirty;
  2) Clutch push rod damaged or jammed.

- **Hard clutch operation**

  There is burr on clutch housing chute.

- **Shift lever can't return**

  1) Return spring cracked or slipped;
  2) Transmission shaft plate convenes with crankcase or crankcase cover.

- **Vehicle moves slowly upon firmly grabbing the handle**

  1) Excessive handle free stroke
  2) Clutch plate deformed or bent.

- **Hard shifting or impossible to shift**

  1) Locating plate bent;
  2) Stopping plate assembly damaged or cracked;
  3) Shifting yoke cracked or slipped;
  4) Clutch improperly adjusted.

## Right crankcase cover

**To remove the cylinder head cover:**

1) Loosen the right shaft axle box cover external tubing bolt.

2) Remove the oil drain plug to drain the engine oil inside the crankcase.

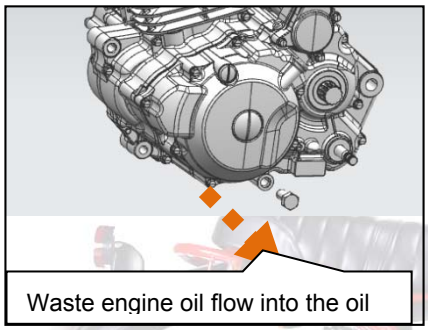


3) Separate the clutch control line with the clutch operating lever

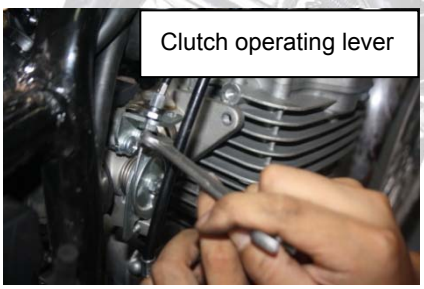


4) Remove the oil filter cover.

5) Remove the right crankcase cover connecting bolt

6) Take out the right crankcase cover component.

7) Take out the right crankcase cover sealing paper gasket

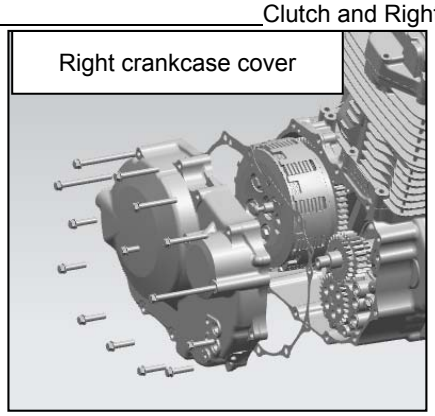


**To install the right crankcase cover:**

1) Confirm the location pin; clean up the residual sealing paper gaskets on the right crankcase and right crankcase cover.

2) Replace with a new right crankcase cover sealing paper gasket.

3) Mount the right crankcase cover.

4) Mount the oil filter cover.

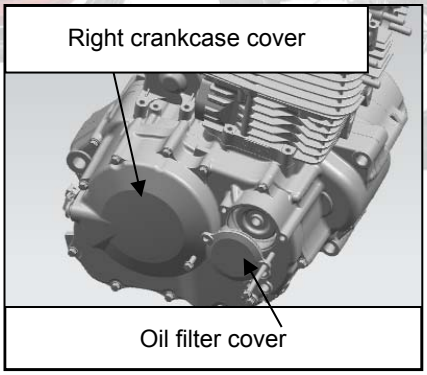

5) Mount the right shaft axle box cover external tubing bolt

6) Adjust the direction of the clutch operating lever, Mount the clutch operating lever, rear brake return spring, cotter pin, rear brake lamp switch, etc.

7) Refill engine oil.

⚠**Notice:**

***Do not scrape the crankshaft oil seal.***

***Assemble only when the rack side of the clutch push rod faces the crankshaft.***

## Disassemble and assemble of right crankcase cover

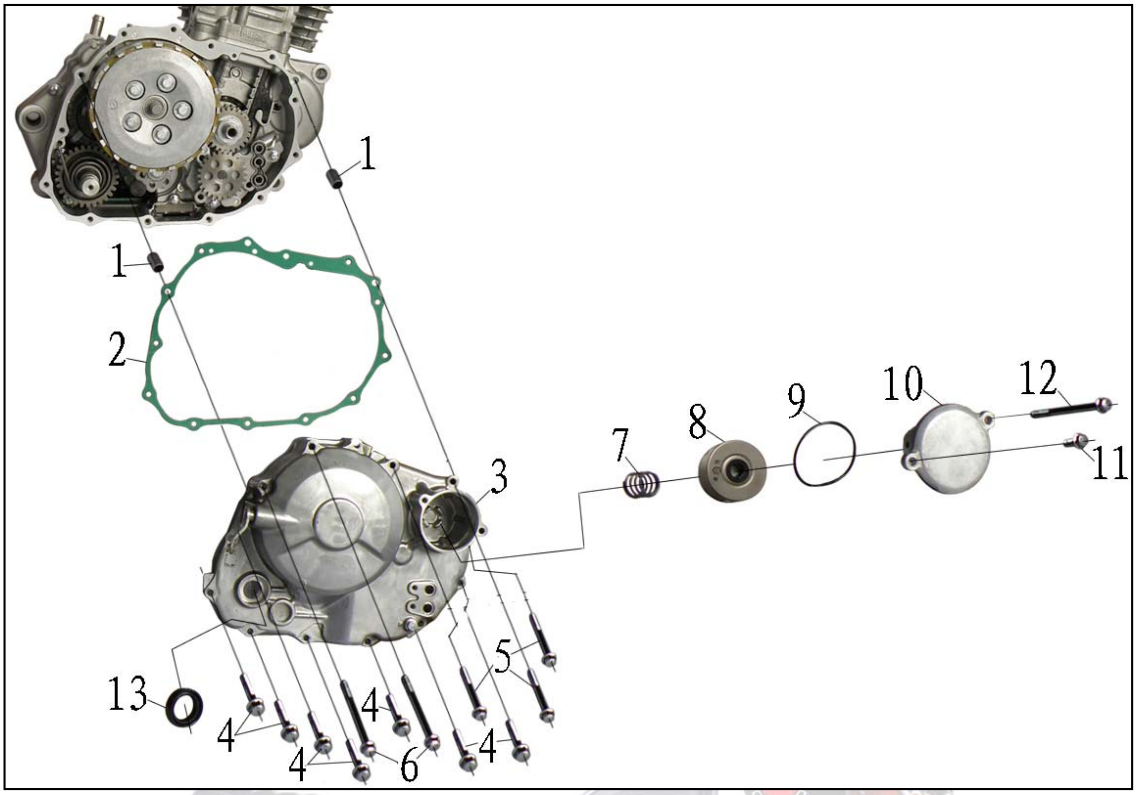


| No | Procedure | Quantity | Remarks |
|---|---|---|---|
| | **Removing order** | | **Installation is in the reverse order of removal** |
| 1 | The positioning pin | 2 | |
| 2 | Right crankcase cover gasket | 1 | Replace it with a new one while assembling |
| 3 | Right crankcase cover | 1 | |
| 4 | Bolt M6*28 | 7 | |
| 5 | Bolt M6*45 | 3 | |
| 6 | Bolt M6*65 | 2 | |
| 7 | Spring, filter gauze | 1 | |
| 8 | Engine oil filter element | 1 | |
| 9 | O- ring | 1 | Replace it with a new one as required |
| 10 | Filter cap | 1 | |
| 11 | Filter cap bolt M6*16 | 1 | |
| 12 | Filter cap bolt M6*75 | 1 | |
| 13 | Oil seal 20x30x7 | 1 | Replace it with a new one as required |

## Clutch

**To remove the clutch:**

1) Remove the right crankcase cover (See “Removal of right crankcase cover").

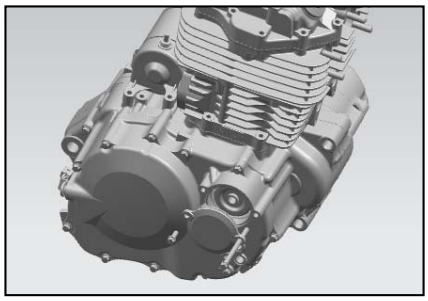

2) Remove the clutch push rod with the clutch push rod extractor S TOOL .

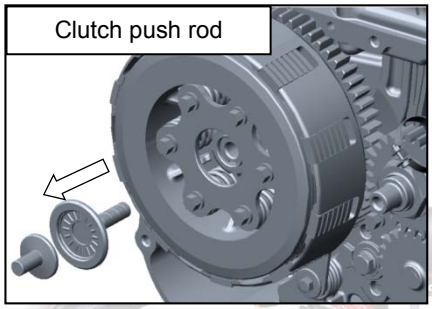


3) Use the fastening tool S TOOL to clamp the primary driving and driven gear, and remove the nut M18 and butterfly washer.

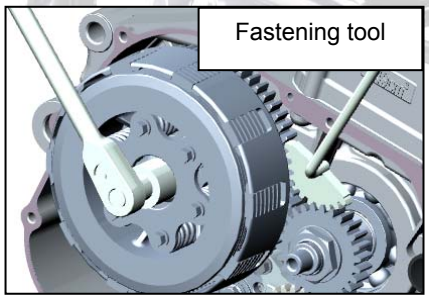


4) Remove the clutch.

5) Remove the clutch washer.

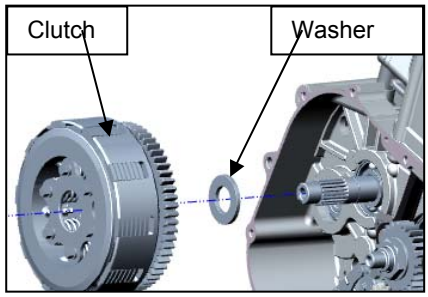


**To install the clutch:**

1) Mount the clutch washer with the sabotage side facing the main shaft right bearing.

2) Mount the clutch.

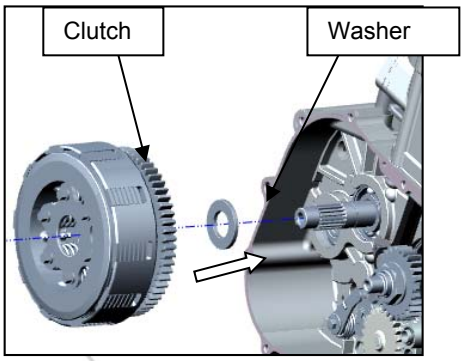


3) Mount the butterfly washer and retaining nut M18. Note to assemble with the protruding side of the butterfly nut washer facing outside.

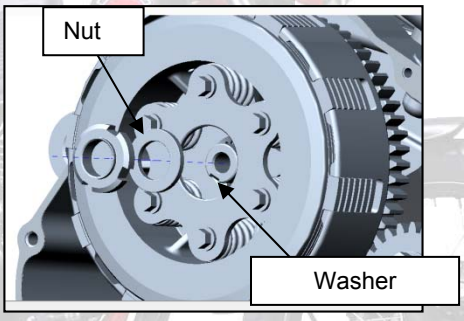


4) Use the fastening tool S TOOL to clamp the primary driving and driven gear, and screw up the retaining nut M18 to the tightening torque of 120N.m.

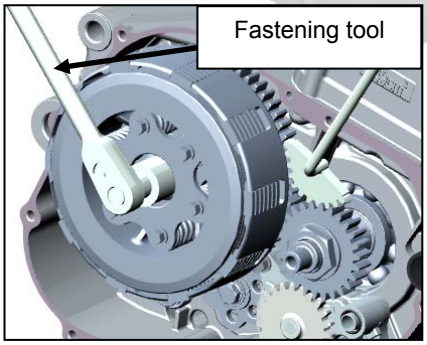

5) Mount the clutch push rod with the clutch push rod assembler S TOOL

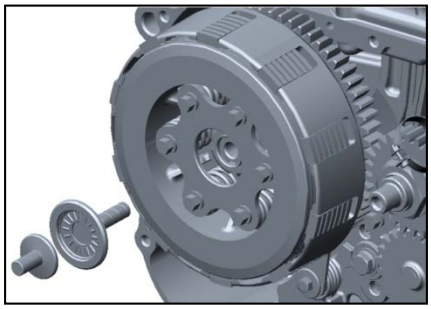

6) Assemble the right crankcase cover by turning the clutch push rod until its rack side faces the crankshaft. (See “Installation of right crankcase cover").

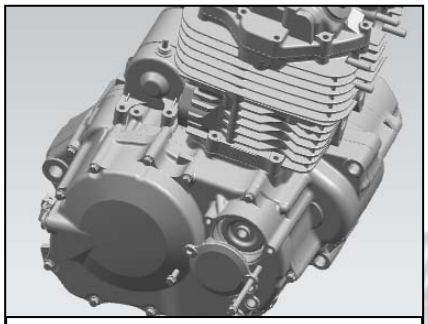

Right crankcase cover

**Warning**

***Thread retaining adhesive LOCTITE243 must be coated on the clutch retaining nut M18 while assembling, with the tightening torque being 120N.m.***

**Removal / Installation of Clutch**

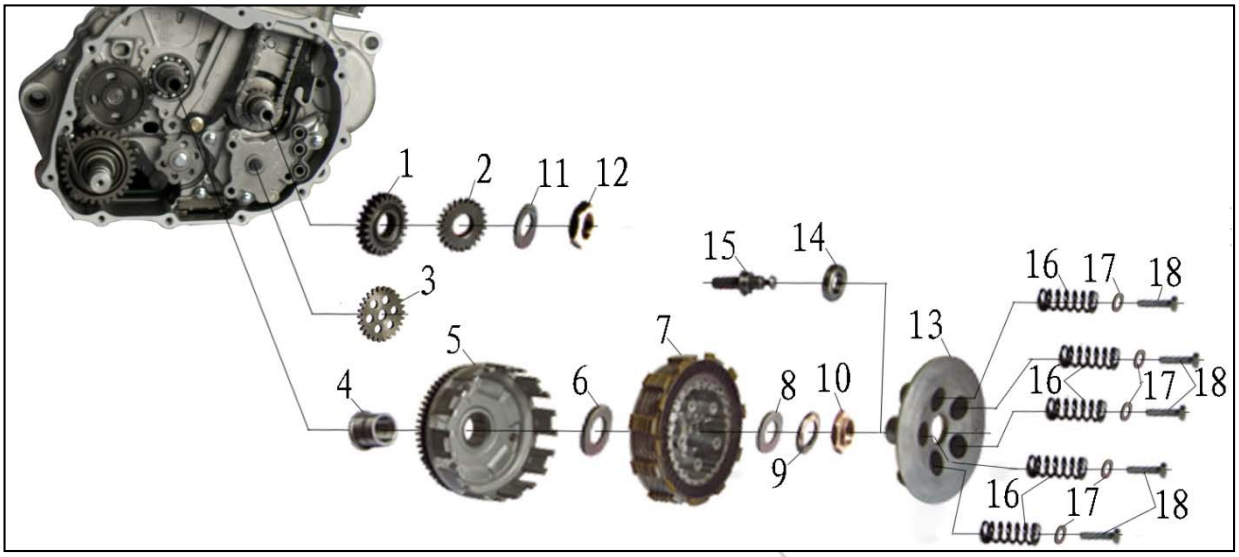


| No | Procedure | Quantity | Remarks |
|---|---|---|---|
| | **Removing order** | | **Installation is in the reverse order of removal** |
| 1 | Primary driving gear | **1** | |
| 2 | Oil pump driving gear | **1** | |
| 3 | Oil pump driven gear | **1** | |
| 4 | Collar, clutch outer | **1** | |
| 5 | Clutch outer | **1** | Do not further disassemble |
| 6 | Clutch washer 22x35x2 | **1** | Assemble with the sub stage side facing inwards |
| 7 | Drive Disc Comp., Clutch | **1** | |
| 8 | Clutch washer | **1** | |
| 9 | Wave washer | **1** | |
| 10 | Locking Nut M18 x1 | **1** | Use fastening tool while removing and use thread retaining adhesive while assembling LOCTITE 243, with the tightening torque being 120N.m |
| 11 | Washer 18.2x32.2x2 | **1** | |
| 12 | Nut M18 x1 | **1** | With the tightening torque being 150N.m |
| 13 | Clutch pressure plate | **1** | |
| 14 | Bearing6002 | **1** | |
| 15 | Pusher, Clutch | **1** | |
| 16 | Clutch spring | **5** | |
| 17 | Washer | **5** | |
| 18 | BoltM6X35 | **5** | With the tightening torque being 15N.m |

**Disassemble and assemble of clutch**

Disassemble and assemble the clutch according to the following diagram.

While removing the clutch lift plate, alternatively loosen the 6connecting bolts to avoid damage of cracking due to uneven force of the clutch spring.

While mounting the clutch lift plate, alternatively loosen the 6 connecting bolts to the specified torque. Assemble with the

protruding side of the butterfly washer facing the plain washer

While assembling, the clutch disc must be coated with lubricating oil; in case of replacing new clutch disc, it must be soaked in oil for over 24 hours before being assembled. Do not further disassemble the clutch housing, otherwise damage will occur.

**Explanation:**

***While unscrewing bolt, do it in a crossing way twice or thrice. Do in the same way for screwing up bolt.***

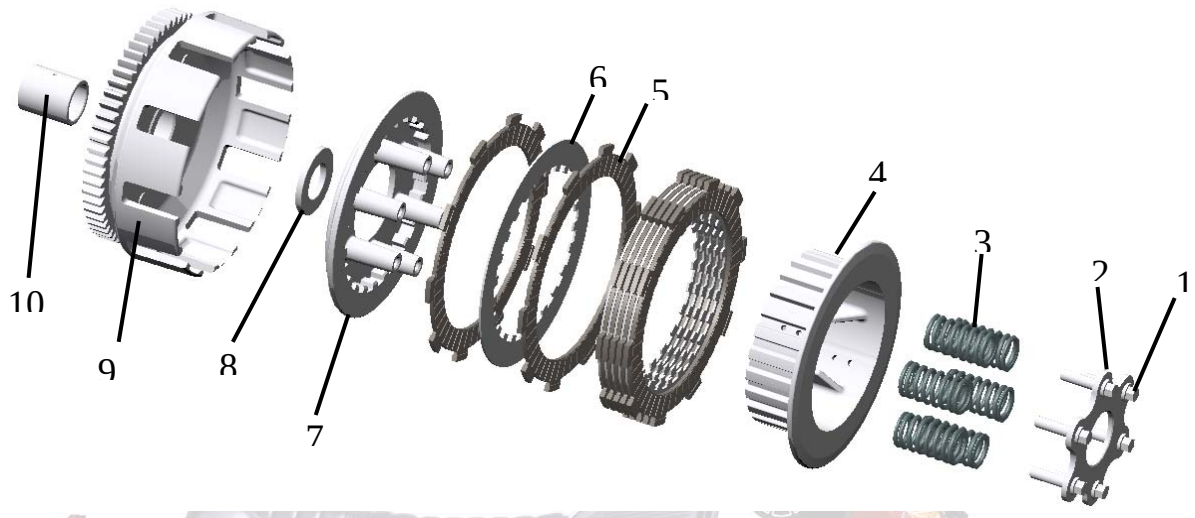


| No | Procedure | Quantity | Remarks |
|---|---|---|---|
| | **Removing order** | | **Installation is in the reverse order of removal** |
| 1 | Bolt | **6** | Tightening torque 12N.m. |
| 2 | Clutch lift plate | **1** | |
| 3 | Clutch spring | **6** | |
| 4 | Clutch center | **1** | |
| 5 | Clutch driving disc | **7** | Gum base, soaking oil while assembling |
| 6 | Clutch driven disc | **6** | |
| 7 | Clutch pressure plate | **1** | |
| 8 | Plain washer | **1** | |
| 9 | Clutch outer | **1** | |
| 10 | Clutch outer collar | **1** | Assemble with the sub stage side facing inwards |

**Clutch inspection**

1) Check whether the housing splice has scars or cuts due to the collision of clutch disc.

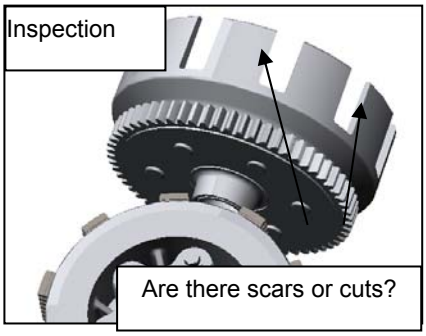


2) Check the clutch disc. If there is a scratch or de pigment or a strong scorching smell, replace it. Measure the thickness of each clutch disc.

**Maintenance limit: ⩾2.8mm.**

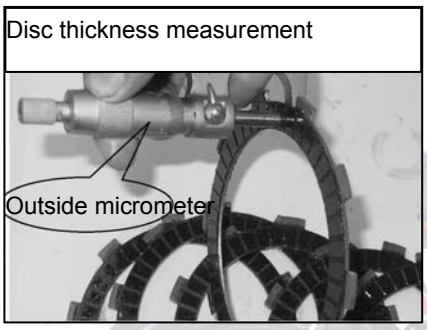


3) Check the clutch plate for distortion, and check the planners with a clearance gauge.

**Maintenance limit: ⩽0.20mm.**

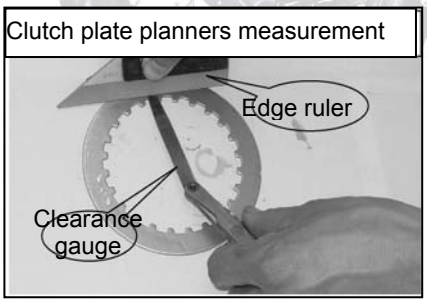


4) Measure the thickness of each clutch plate. The thickness is 1.4mm.

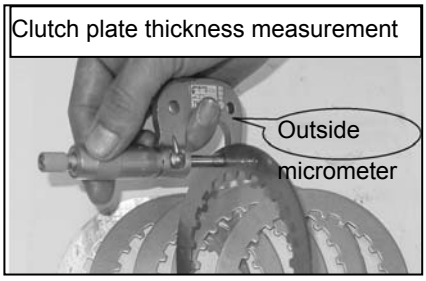


5) Measure the free length of the clutch spring.

**Maintenance limit: ⩾41.3mm.**

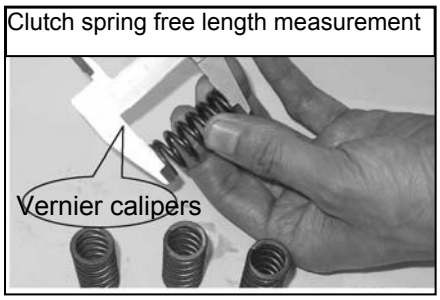

# 8. Magneto and starting system

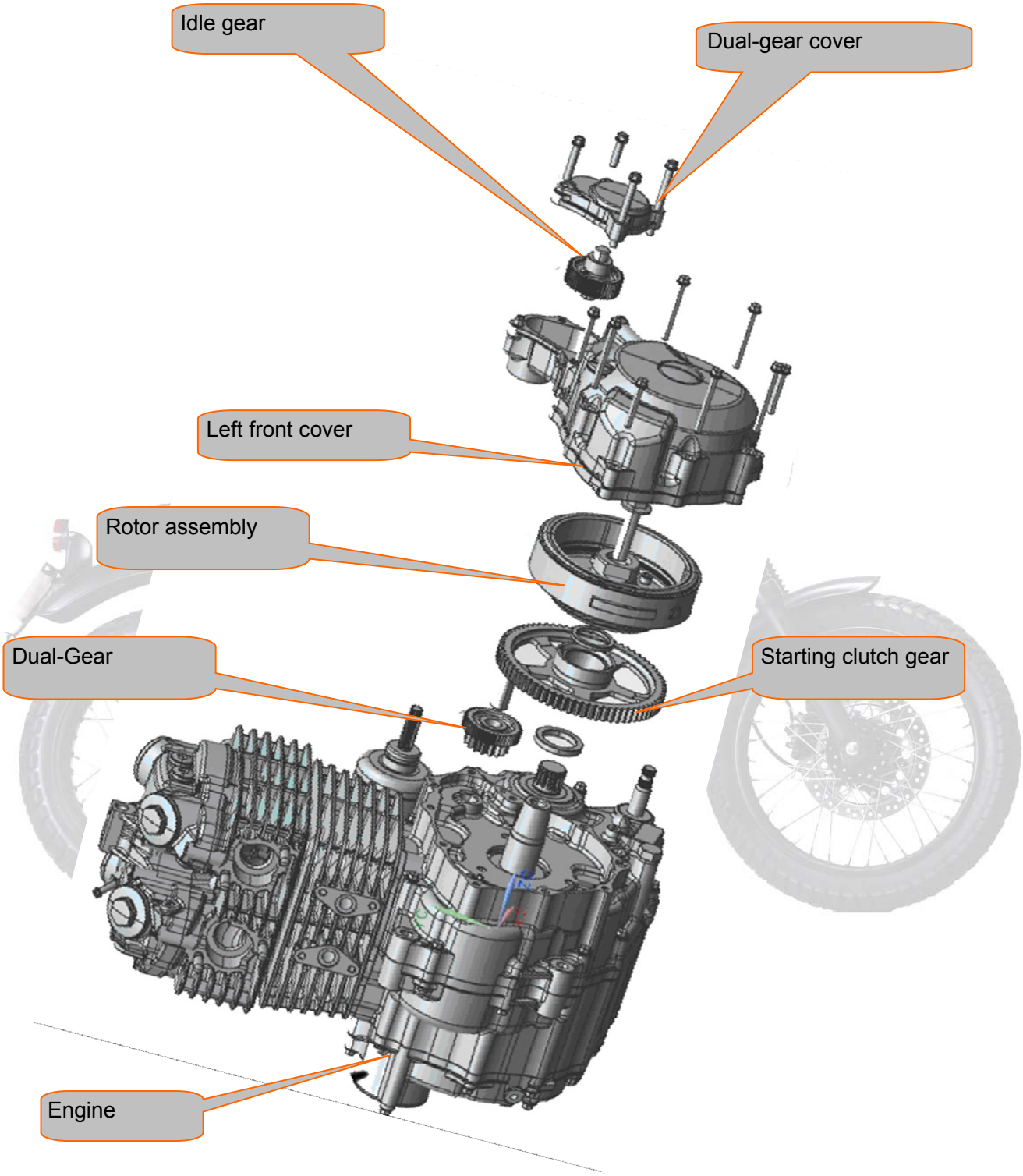

# Magneto and starting system

| | |
|---|---|
| Maintenance notice | Rotor assembly |
| Left front cover | Starting motor and starting transmission system |

## Maintenance notice

To carry out the maintenance stated herein, and the engine lubricating oil must be drained.。

Before assembling, clean all parts and components with cleaning agent and dry them with compressed air.

When mount， Mount the parts, coat the mixture of engine oil and molybdenum disulfide onto the left crank journal, as the initial lubrication。

Do not dent the seal surface, and do not damage the stator coil.

## Technical specifications & maintenance benchmark

| Item | | Standard value | Maintenance limit value |
|---|---|---|---|
| Disk gear | Disk gear external diameter | φ51.67～φ51.7 | φ51.57 |
| One-way device outer body | One-way device outer body internal diameter | φ35～φ35.027 | φ35.040 |
| Disk gear washer | Washer thickness | 5.65～5.75 | 5.6 |

### Key torque values

| | |
|---|---|
| Rotor fastening nut | **36～45N.m** |
| Stator fastening bolt | **8-12N.m** |
| Pressure plate fastening bolt | **7～10N.m** |
| Starting clutch connecting screw | **8～12N.m** |

## Left front cover

**To remove the left front cover:**

1) Remove the gear shift pedal and left rear cover, and separate the magneto lead connector with the main cable.

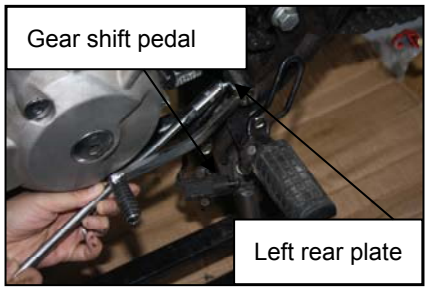


2) Unscrew the oil drain plug to drain the engine lubricating oil inside the engine

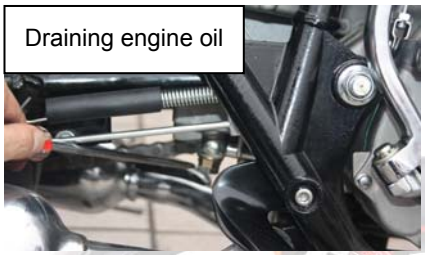


3) Remove the double-linked gear cover connecting bolts

4) Remove the double-linked gear cover..

5) Remove double-linked gear, shaft, sealing paper gasket.

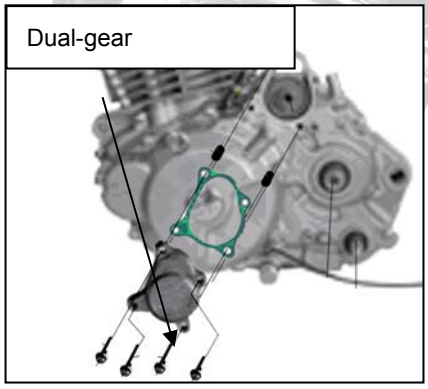


6) Remove the left front cover.

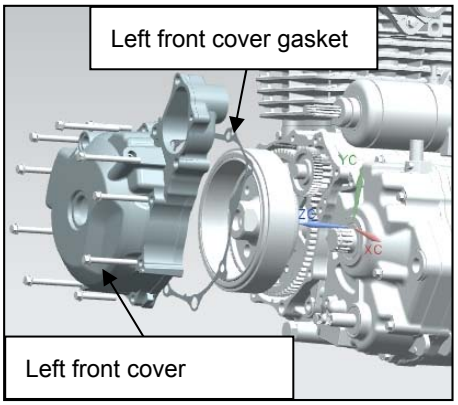


]

## Disassembly and assembly of left front cover

Disassemble and assemble the left front cover according to the following diagram.

Use the thread retaining adhesive LOCTITE 648 while assembling the pressure plate bolt.

Use the thread retaining adhesive LOCTITE 648 while assembling the magneto stator connecting bolt.

O In case of O-ring aging, prolonging or deforming, replace it.

**Notice:**

**Do not dent the seal surface, and do not damage the stator coil.**

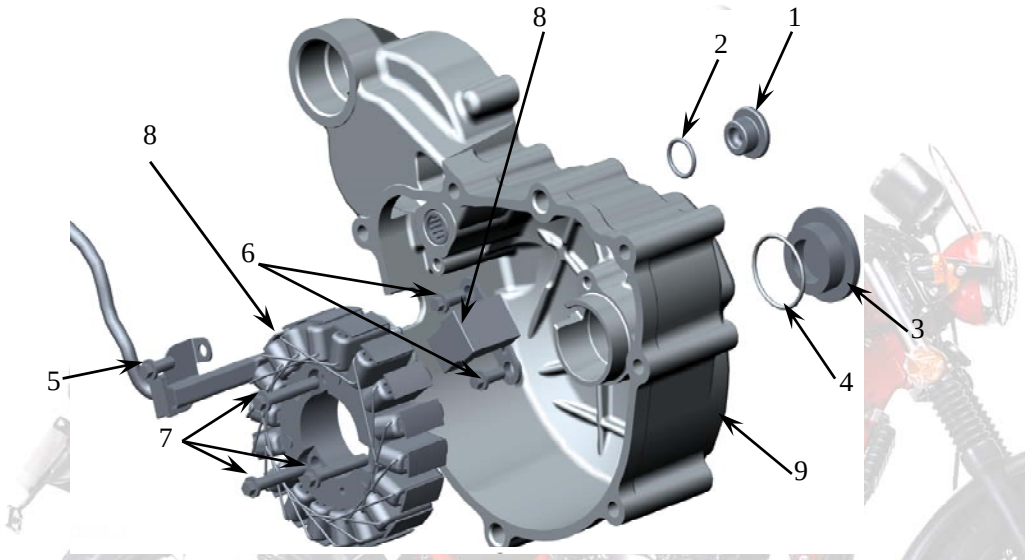


| No | Procedure | Quantity | Remarks |
|---|---|---|---|
| | **Removing order** | | **Installation is in the reverse order of removal** |
| 1 | Upper eyehole cover | 1 | |
| 2 | O- ring | 1 | Replace it with a new one as required |
| 3 | Eyehole cover | 1 | |
| 4 | O- ring | 1 | Replace it with a new one as required |
| 5 | Bolt M6x16 | 1 | Use thread retaining adhesive LOCTITE 648 while assembling |
| 6 | Bolt (small pan head) M6x16 | 2 | Use thread retaining adhesive LOCTITE 648 while assembling |
| 7 | Bolt (small pan head) M6x32 | 3 | Use thread retaining adhesive LOCTITE 648 while assembling |
| 8 | Pressure plate | 1 | |
| 9 | Left front cover | 1 | |

## Rotor assembly

**To remove the clutch:**

1) Remove the left front cover (See Removal of left front cover).

2) Remove the starting idle gear, double-linked gear, etc

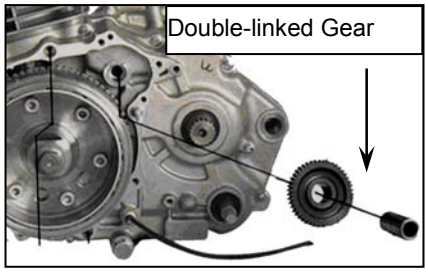


3) Use the rotor fastening tool (S TOOL) to fasten the rotor, and remove the fastening nut M12 and plain washe

4) r.

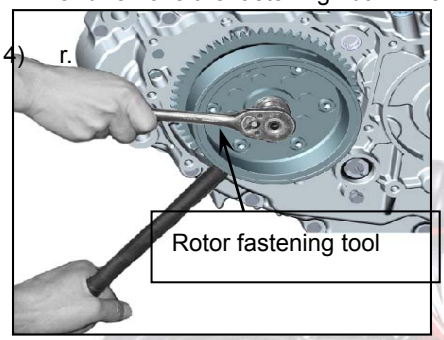


5) Use the rotor extractor (S TOOL) to extract the rotor..

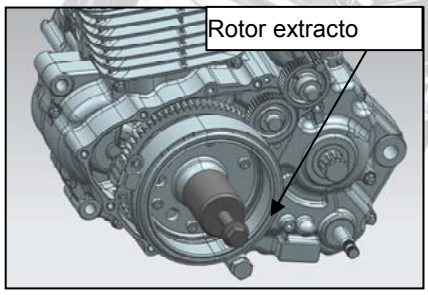


6) Remove the rotor assembly washer、 disk gear、needle bearing、disk gear washer

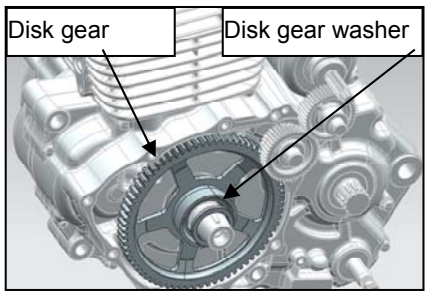


**Notice:**

***Do not let the semicircular key drop into the crankcase.***

## Disassembly and assembly of rotor assembly

Disassemble and assemble the rotor assembly according to the following diagram.

Use thread retaining adhesive LOCTITE 648 on the screw while assembling, with the tightening torque being 10-14N.m

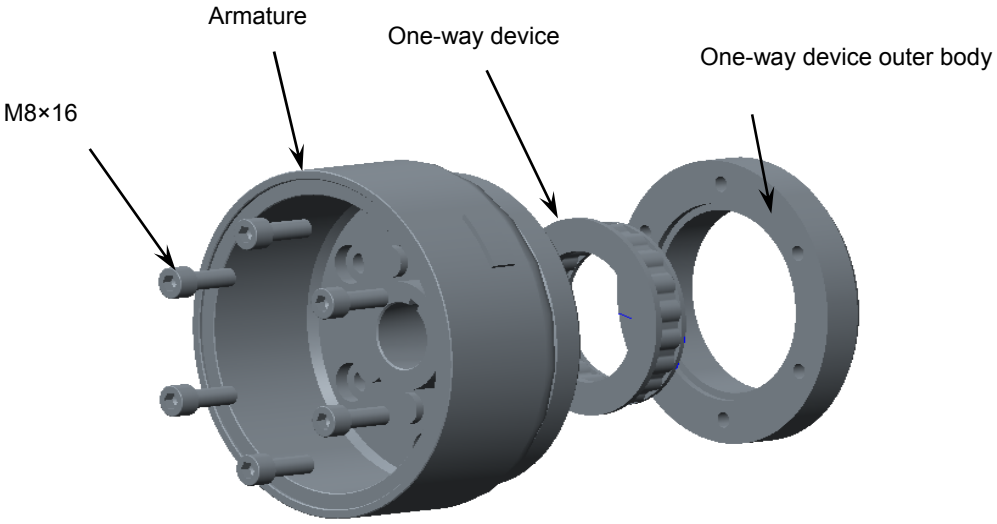


| No | Procedure | Quantity | Remarks |
|---|---|---|---|
| | **Removing order** | | **Installation is in the reverse order of removal** |
| **1** | Screw M8×16 | **6** | Use thread retaining adhesive LOCTITE 648 while assembling, with the tightening torque being 25N.m |
| **2** | One-way device outer body | **1** | |
| **3** | One-way device | **1** | Be careful of the assembling direction |
| **4** | Armature | **1** | |

## Starting motor and starting

**Transmission system**

**1)** Remove the live wire and earth wire of the starting motor.

2) Remove the starting motor connecting bolt M6×25.

3) Push the motor towards the right and lift it, and then carefully take it out from the left side.

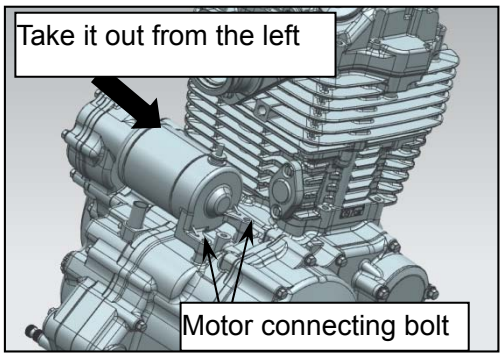


**Installation is in the reverse order of removal**

**To mount the rotor assembly:**

1) Mount the disk gear washer, coat the mixture of engine oil and molybdenum disulfide onto the left crank journal, and mount the disk gear and confirm the semicircular key.

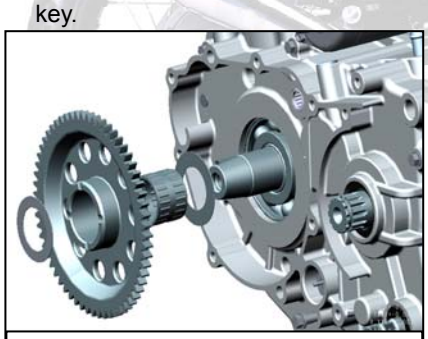

Apply the mixture of engine oil and molybdenum disulfide

2) Mount the rotor assembly

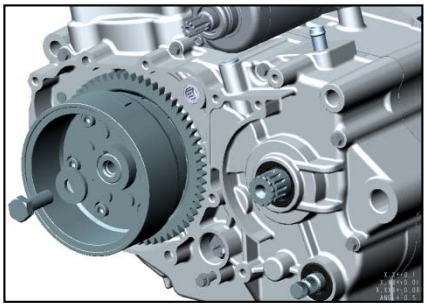

3) Mount the plain washer and apply thread retaining adhesive LOCTITE648 to the fastening nut M12; use the rotor fastening tool S TOOL fasten the rotor, and screw up the nut M12 to the torque of 45N.m

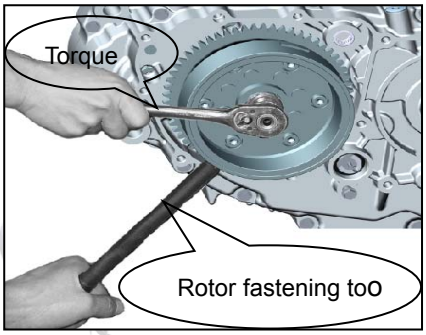


4) To install the double-linked gear:

The Washer and the double-linked gear is assembled into the left crankcase

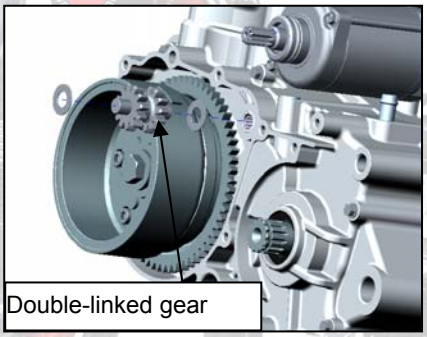


5) To install the left front cover:

⑴Clean the sealing paper gasket remaining on the left crankcase and left front cover, replace with new left front cover sealing paper gasket and confirm the location pin, starting idle gear, double-linked gear, etc. are in correct position.

⑵Mount the left front cover,

⑶Mount the left front cover bolt

⑷ Connect the magneto leads.

⑸ Mount the left rear cover, gear shift pedal and engine

protection plate.

⑹ Put on the oil drain plug and refill engine lubricating oil.

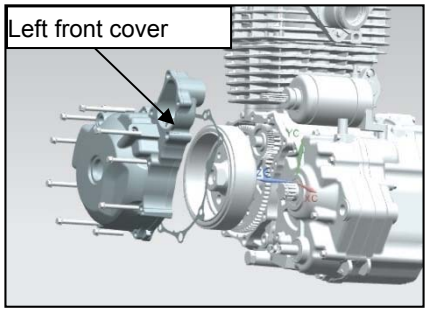


6) To install the double-linked gear cove:

⑴Clean up the left front cover and parts，mount the starting idle gear, double-linked gear, etc.

⑵The O-ring into the double gear cover ，O In case of O-ring aging, prolonging or deforming, replace it.

⑶Mount the double-linked gear cove,

⑷screw up to the torque of 8-12N.m

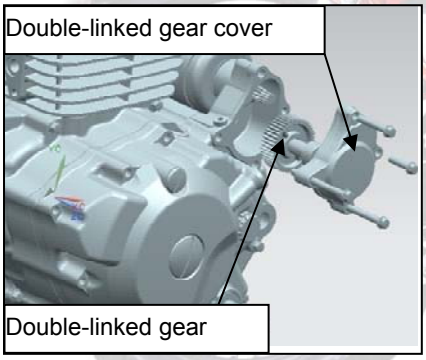


⚠ **Notice:**

***Never let adhere to the left crank conical surface and rotor tapered surface.***

***The disk gear shall only be capable of rotating clockwise flexibly relative to the rotor.***

***Use the thread retaining adhesive LOCTITE 648 while assembling the pressure plate bolt.***

**Warning**

***Thread retaining adhesive LOCTITE243 must be applied to the rotor retaining nut M12 while assembling, with the tightening torque being 45N.m.***

## Check

1) Check the spline gear of output shaft of the starting motor for defect, squeezing, deforming, etc.

2) Check the double-linked gear for missing

3) Check the idle gear shaft and double-linked gear shaft for bending.

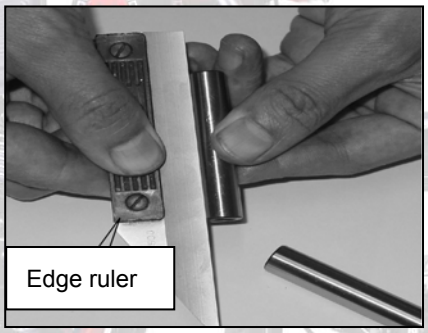


4) Check the rotating flexibility and unidirectivity of the disk gear (relative to clockwise rotor rotation).

5) Check the axial play of the disk gear, generally not less than 0.4mm.

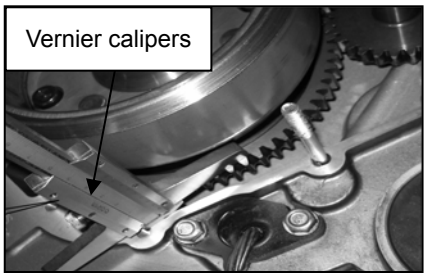

6) Measure the disk gear diameter, the maintenance

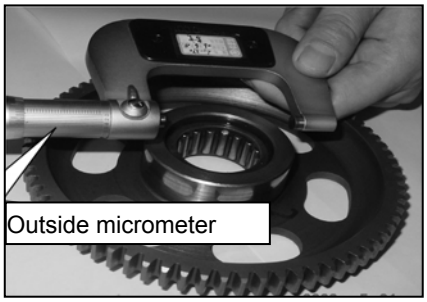


7) Measure the washer thickness, the maintenance limit:

⩾0.4mm

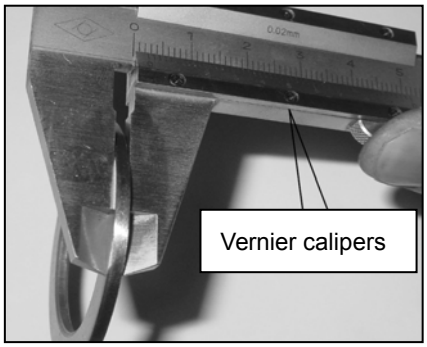

# 9. Crankcase, crankshaft and Shift mechanism

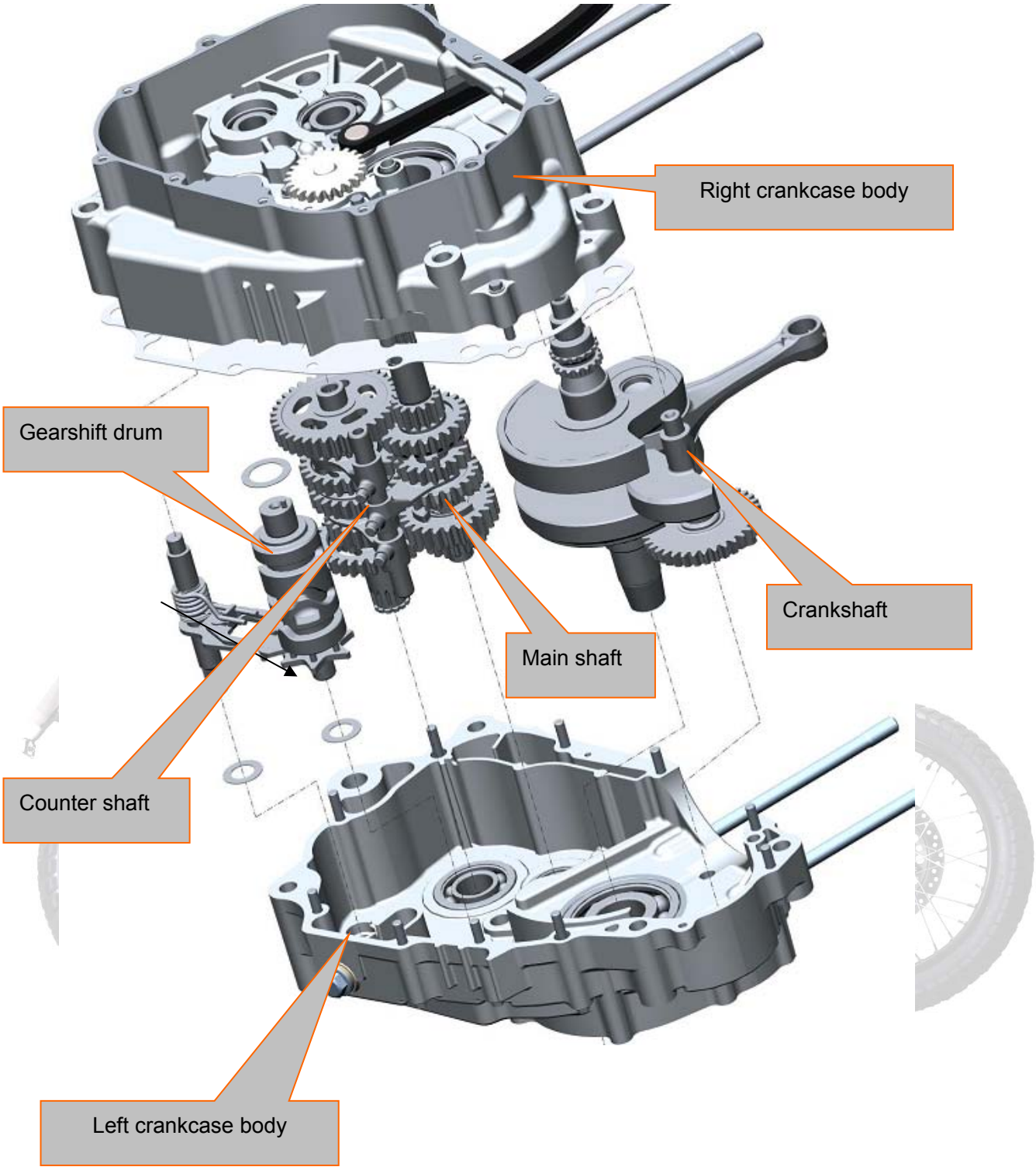

# Crankcase, crankshaft and Shift mechanism


| | |
|---|---|
| Maintenance notice | Crankshaft and balance shaft |
| Troubleshooting | Variable transmission system |
| Crankcase | |


## Maintenance notice

To carry out the maintenance stated herein, the engine must be removed from the frame.

To repair the crankshaft, balance shaft or variable transmission system, the left hand crankcase and the right hand crankcase must be separated, which is known as crankcase dissection. Before crankcase dissecting, the following parts and components of the engine shall be removed:

1) Right hand crankcase, clutch, gear shifter

2) Cylinder head cover, camshaft, cylinder head, cylinder and piston (See “Cylinder head, cylinder and piston”);

3) Left front cover, rotor assembly, electrical starting transmission system (See “Magneto and electrical starting system”);

4) Driving drive sprocket, shift switch.

Before assembling, clean all parts and components with cleaning agent and dry them with compressed air.

**Technical specifications & maintenance benchmark**

| Item | | Standard value | Maintenance limit value |
|---|---|---|---|
| Shift fork claw thickness | Gear shift fork | 6.05～5.40 | 5.80 |
| Crankshaft | Connecting rod small end bore diameter | Φ20.03～Φ20.038 | Φ20.063 |
| | Disc planeness | 0.028～0.042 | 0.06 |
| | Connecting rod big end radial clearance | 0.30～0.60 | 0.80 |
| | Radial runout | 0.03 | 0.10 |
| | Left crank journal | Φ29.959～Φ29.98 | Φ29.87 |

## Troubleshooting

- **Noise from engine**

1) Crankshaft bearing worn;

2) Connecting rod big end bearing worn;

3) Driving/driven shaft bearings worn;

4) Balance shaft supplementary tooth spring failure.

- **Driving/driven shaft gears engaged badly**

1) Shift fork bent or damaged;

2) Shift fork shaft bent;

3) Gearshift drum badly machined or bearing shifted;

4) Driving/driven shaft bearings shifted.

- **Gear shift trouble**

1) Shift fork bent or damaged;

2) Shift fork shaft bent;

3) Gearshift drum guiding slot worn or damaged;

4) Clutch improperly adjusted.

5) Locking plate bend or fray；

6) Five star plate assy broken

7) Pin broken or slip off

- **Gear shaft cannot return back**

1) Sping broken or slip off

2) Variable-speed shaft plate interfere crankcase or crankcase cover。

## Crankcase

**To remove the crankcase:**

1) Remove the engine from the frame (engine oil fully drained) and put it on the assembly operating table.
2) Remove such parts and components as right hand crankcase cover, clutch, gear shifter, cylinder head cover, camshaft, cylinder head, cylinder, piston, left front cover, rotor assembly, electrical starting transmission system, driving drive sprocket, etc. (Refer to the related sections).

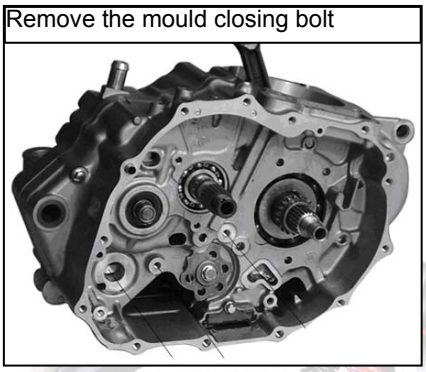


3) Use a Bakelite hammer or a nylon hammer to strike the left hand crankcase gently to separate it with the right hand crankcase.
4) Remove the driving/driven shaft, gearshift drum, shift fork, etc.
5) Remove the cranks-haft and balance shaft。

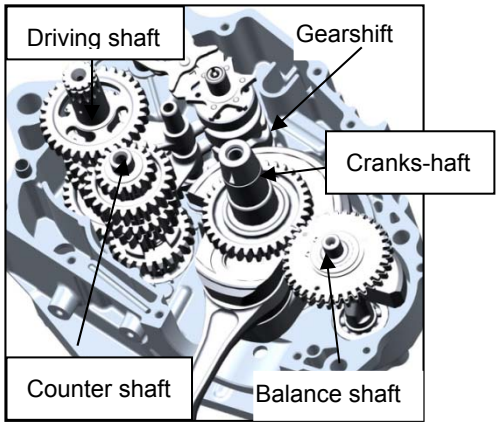


⚠**Notice**

***Do not pry the left/right hand crankcase body by inserting such tools as screwdrivers into the mould closing face.***

**To mount the crankcase:**

1) Place the right hand crankcase on the assembly operating table, and assemble the internal parts and components of the crankcase, including crankshaft, balance shaft, driving/driven shaft, gearshift drum, shift fork, etc
2) Clean up the left and right crankcase box surface, put the new crankcase paper pad, confirm the positioning pin.

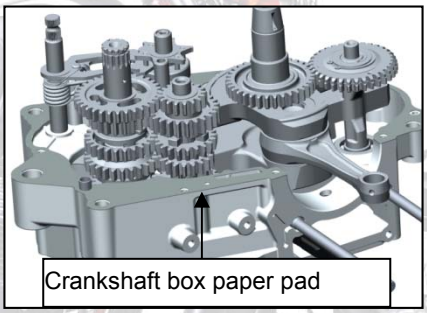


3) Use the counter shaft oil seal guide S TOOL to protect the counter shaft oil seal, use the gearshift drum oil seal guide to pr S TOOL e gearshift drum oil seal, and mount the left hand crankcase (closing).

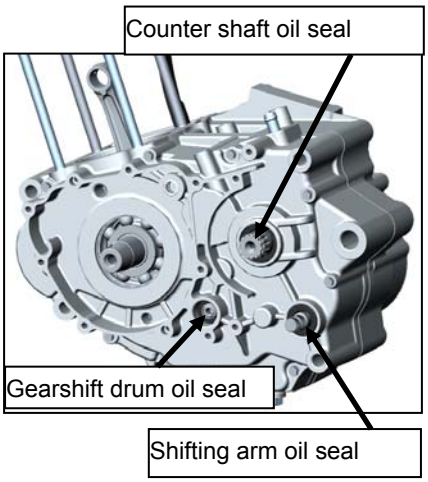

4) Mount the mould closing bolt and fasten it.

5) Mount other parts and components of engine, mainly include right hand crankcase cover, clutch, gear shifter, cylinder head cover, camshaft, cylinder head, cylinder, piston, left front cover, rotor assembly, electrical starting transmission system, driving drive sprocket, etc. (Refer to the related sections).

6) Mount the assembled engine onto the frame, and engine oil to complete the assembly of the complete vehicle.

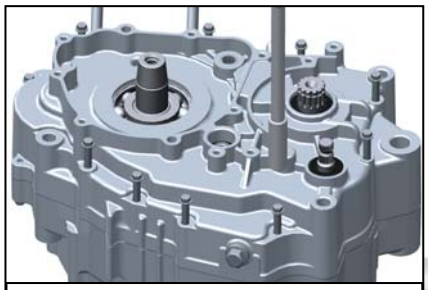

Mount the mould closing bolt

⚠**Notice:**

***To close the crankcase, use your hand(s) to gently press it in place, or use a Bakelite hammer to strike it gently. Never strike it forcibly.***

## Removal and installation of crankcase

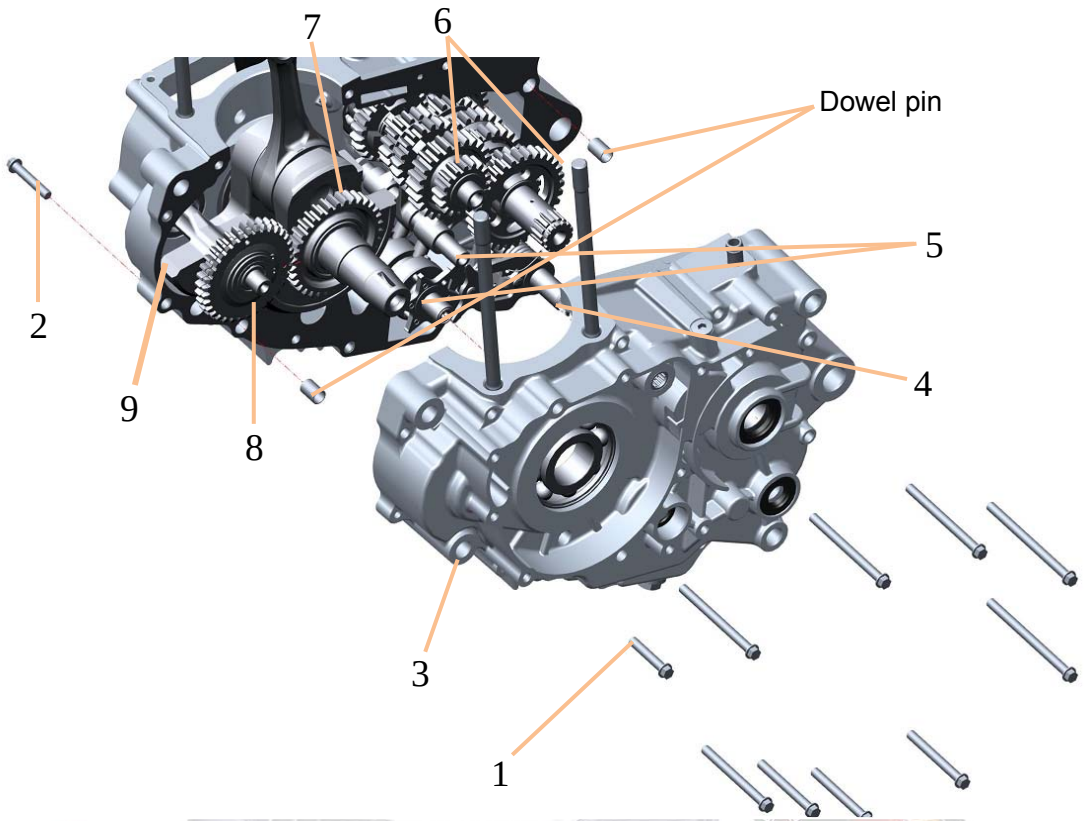


| No. | Procedure | Quantity | Remarks |
|---|---|---|---|
| | **Removing order** | | **Installation is in the reverse order of removal** |
| 1 | Mould closing bolt (big pan head) | 12 | |
| 2 | Mould closing bolt (small pan head) | 1 | |
| 3 | Left hand crankcase | 1 | Use the oil seal guide to protect the oil seal during removal and installation |
| 4 | Shift arm combination | 1 | |
| 5 | Gearshift drum, shift fork, etc. | 1 | |
| 6 | Driving/driven shaft | 1 | |
| 7 | Crankshaft | 1 | |
| 8 | Balance shaft | 1 | |
| 9 | Right hand crankcase | 1 | |

## Disassembly and assembly of left hand crankcase

Disassemble and assemble the left hand crankcase according to the following diagram.

Do not remove breather pipe joint, otherwise damage will be caused. Generally, do not remove the bearing; if it is removed, coat engine oil on surfaces of spare parts while pressing it in; mount it with SST and confirm the press-in depth of the bearing.

Assemble the driving shaft bearing with the with oil seal facing inwards. Disassembling the needle bearing may damage it; in case it is damaged, always change a new one. Replace oil seal with a new one after being removed.

⚠**Notice:**

***Do not dent the sealing surface, and assemble the driving shaft bearing with the side with oil seal facing inwards.***

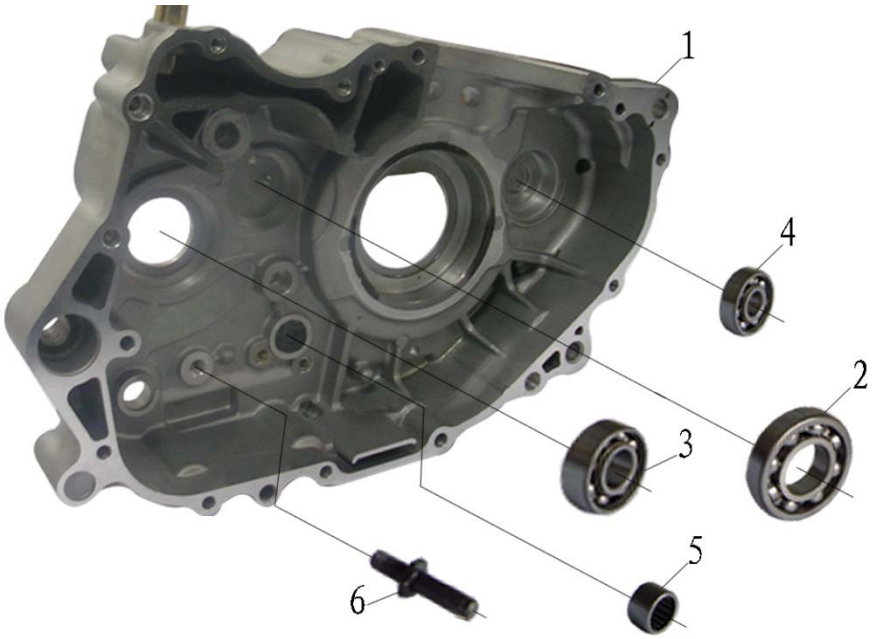


| No. | Procedure | Quantity | Remarks |
|---|---|---|---|
| | **Removing order** | | **Installation is in the reverse order of removal** |
| **1** | Left hand crankcase | **1** | Apply engine oil while assembling |
| **2** | Crankshaft bearing 6203 | 1 | Apply engine oil while assembling |
| **3** | Driving shaft bearing 6006 | 1 | Let the oil seal side face inward and apply engine oil while assembling |
| **4** | Balance shaft bearing 6301/13/C3 | 1 | Apply engine oil while assembling |
| **5** | Crankshaft paper gasket -HK121610 | 1 | Replace it with a new one while assembling |
| **6** | Arm stopper bolt M8x41 | 1 | Do not remove it |

## Disassembly and assembly of right hand crankcase

Generally, do not remove the bearing; if it is removed, coat engine oil on surfaces of spare parts while pressing it in; mount it with SST and confirm the press-in depth of the bearing. Assemble the driven shaft bearing with the with oil seal facing inwards.

Disassembling the needle bearing may damage it; in case it is damaged, always change a new one.

Replace washer with new ones after being removed.

Apply the thread retaining adhesive LOCTITE 648 while assembling the stud bolt.

⚠**Notice:**

***Do not the sealing surface, and assemble the driven shaft bearing with the side with oil seal facing inwards.***

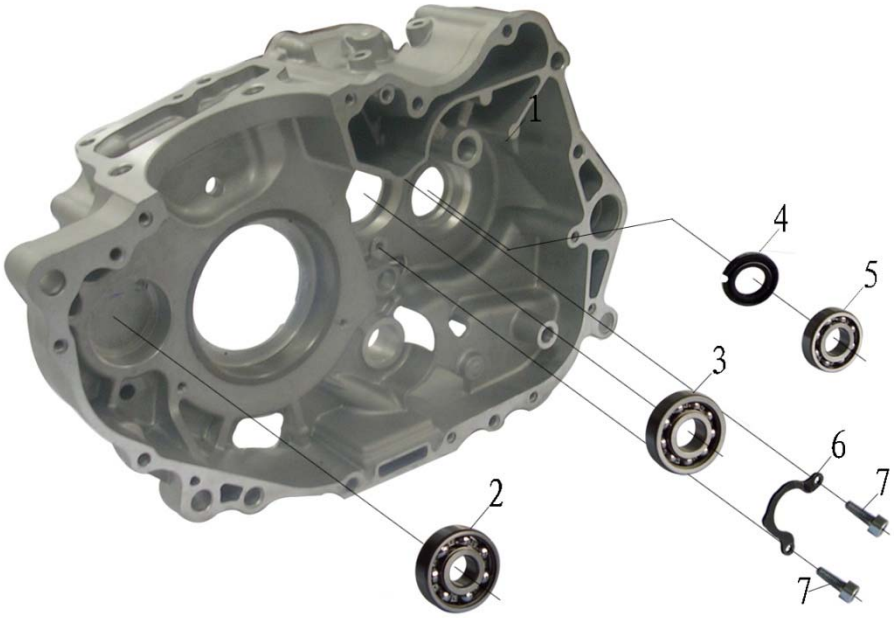


| No. | Procedure | Quantity | Remarks |
|---|---|---|---|
| | **Removing order** | | **Installation is in the reverse order of removal** |
| **1** | Right hand crankcase | 1 | |
| **2** | Balance shaft bearing 6302 | 1 | Apply engine oil while assembling |
| **3** | Driving shaft bearing 62/22/C3 | 1 | Let the oil seal side face inward and apply engine oil while assembling |
| **4** | Gear shift shaft oil seal 18x34x5 | 1 | Apply engine oil while assembling |
| **5** | Driven shaft bearing 60/18RLYAB | 1 | Let the oil seal side face inward and apply engine oil while assembling |
| **6** | Driving shaft bearing pressure plate | 1 | |
| **7** | Stud bolt M6×16 | 2 | Use thread retaining adhesive LOCTITE 648 while assembling |

## Crankshaft and balance shaft

**To remove the crankshaft and balance shaft:**

1) Remove the (left hand) crankcase (See “Removal of left hand crankcase").
2) Remove the balance shaft.
3) Remove the crankshaft.

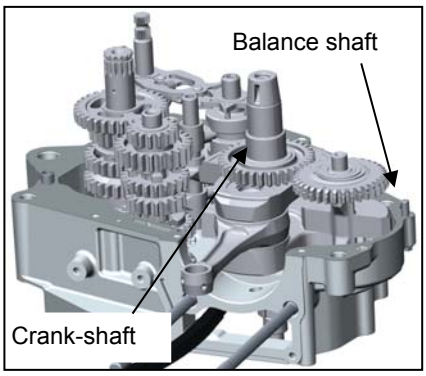


⚠**Notice:**

***While removing, you may strike the balance shaft and crankshaft gently; however, always avoid damaging them.***

**To mount the crankshaft and balance shaft:**

1) Place the right hand crankcase assembled with variable transmission system (driving/driven shaft, etc.) on the assembly operating table, and use a high power electric drier to heat the right crankcase body crankshaft bearing until the temperature at the inner circle of the bearing reaches 106℃, and then assemble the crankshaft.

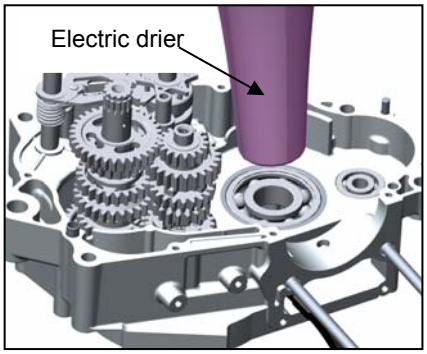


2) Use a high power electric drier to heat the right crankcase body balance shaft bearing until the temperature at the inner circle of the bearing reaches 106℃, and then assemble the balance shaft. Remember to align the markers on the driving and driven gears.
3) Mount the left hand crankcase (See “Installation of crankcase").

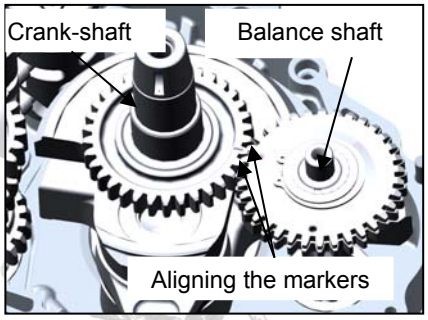


⚠**Notice:**

***Only assemble when the temperature reaches 106℃, otherwise it can’t be assembled. Never savagely strike it! The markers on the driving and driven gears must be aligned.***

**Removal and installation of crankshaft and balance shaft**

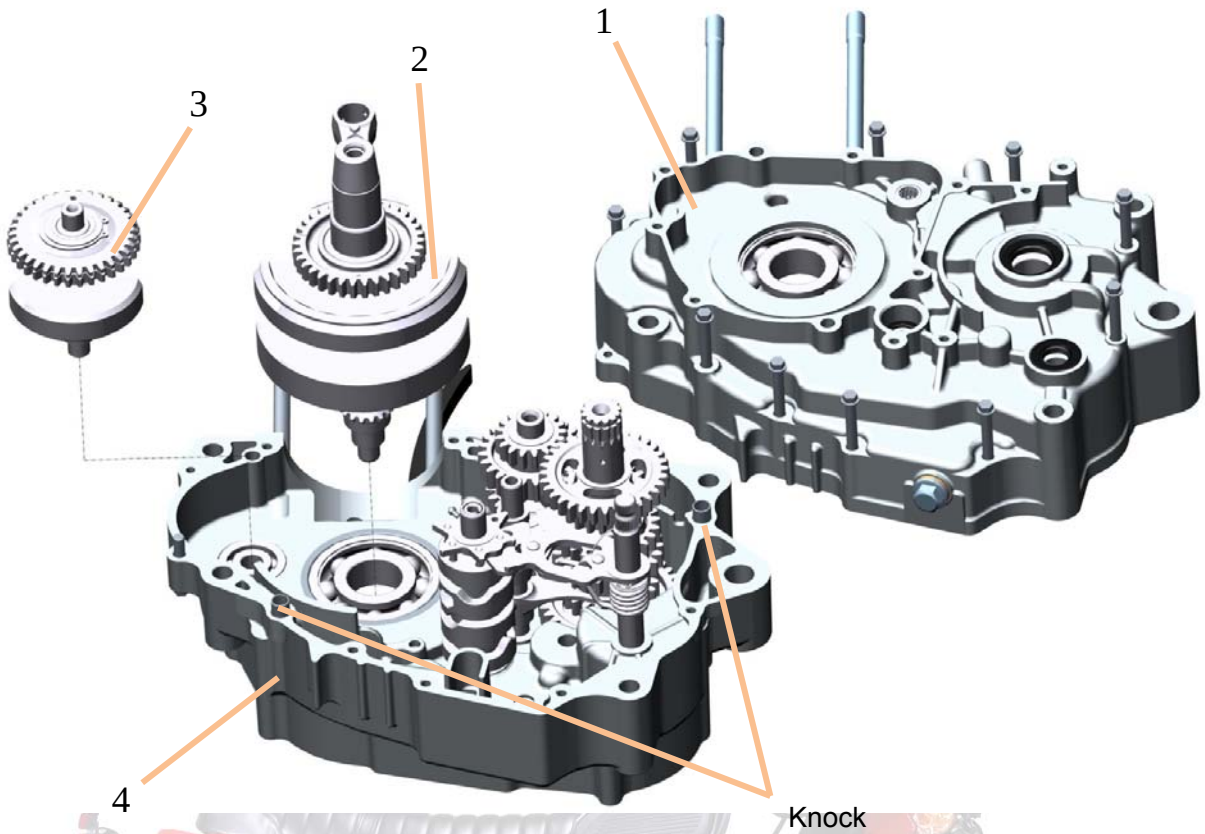


| No. | Procedure | Quantity | Remarks |
|---|---|---|---|
| | **Removing order** | | **Installation is in the reverse order of removal** |
| 1 | Left hand crankcase | 1 | |
| 2 | Crankshaft | 1 | |
| 3 | Balance shaft | 1 | |
| 4 | Right hand crankcase | 1 | |

## Disassembly and assembly of crankshaft and balance shaft

Do not further disassemble the crank shaft, otherwise the spar parts may be damaged.

Disassemble and assemble the balance shaft according to the following diagram.

⚠**Notice:**

**Always align the markers while assembling the balance shaft.**

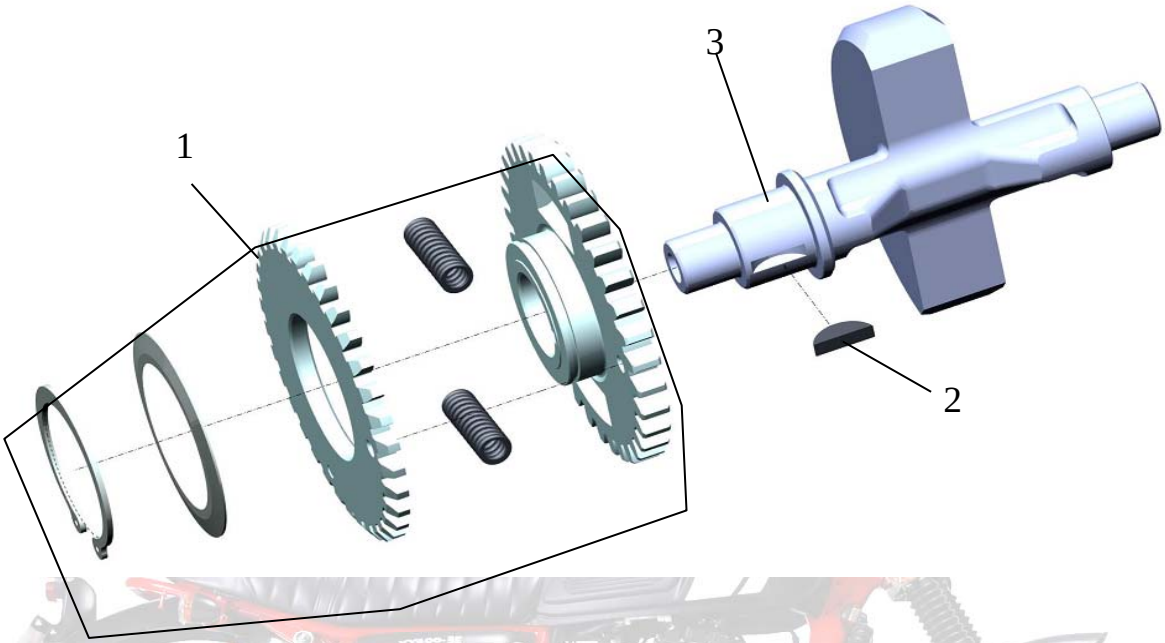


| No. | Procedure | Quantity | Remarks |
|---|---|---|---|
| | **Sequence of disassembling** | | **Assembling is in the reverse order of disassembling.** |
| 1 | Balance shaft driven gear assembly | 1 | Apply engine oil while assembling |
| 2 | Woodruff key | 1 | |
| 3 | Balance shaft | 1 | Apply engine oil while assembling |

**Crankshaft and balance shaft inspection**

1) Check whether the crankshaft journals are abnormally worn, whether the connecting rod can rotate flexibly and whether there is significant noise while rotating.

Measure the connecting rod small end bore diameter.

**Maintenance limit: ≤Φ20.063mm.**

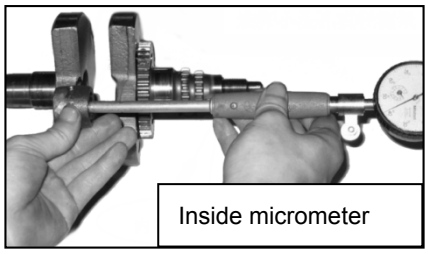


2) Measure the crankshaft radial run out.

**Maintenance limit: ≤0.10mm.**

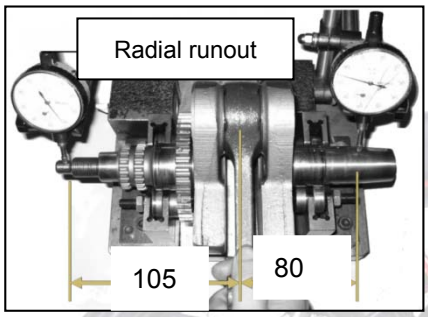


3) Measure the connecting rod big end radial clearance.

**Maintenance limit: ≤0.06mm.**

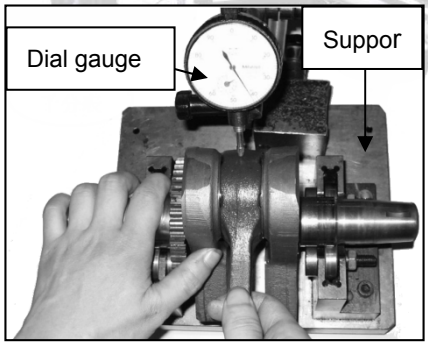


4) Measure the connecting rod large end side clearance, the maintenance limit: ≤0.80mm.

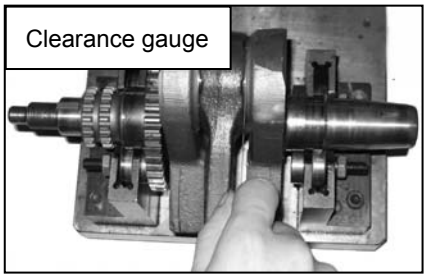


5) Measure the left hand crank journal.

**Maintenance limit: ≥Φ29.87mm.**

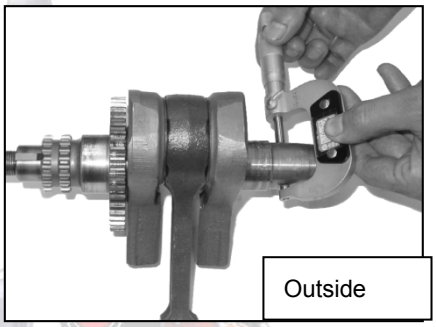


6) Check whether the balance shaft supplementary tooth spring fails and whether the balance shaft supplementary tooth can return.

## Variable transmission system

**To remove the variable transmission system:**

1) Remove the (left hand) crankcase (See “Removal of left hand crankcase").
2) Remove the shift fork shaft.
3) Remove the gearshift drum.
4) Remove the shift fork.
5) Remove the driving/driven shaft

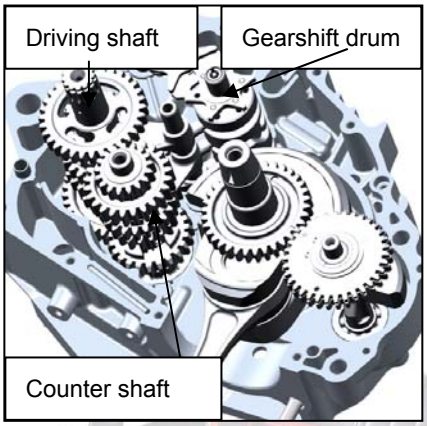


**To mount the variable transmission system:**

1) Place the right hand crankcase assembled with crankshaft and balance shaft on the assembly operating table, and the driving/driven shaft and assemble the them together.

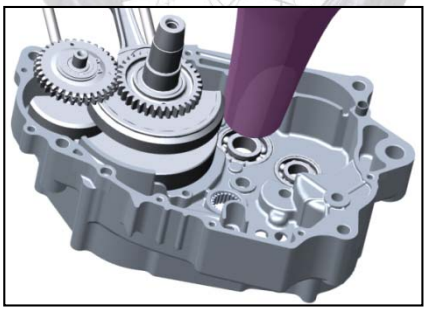

2) Assemble the shift fork with
3) Mount the gearshift drum.。
4) Change the O-shaped sealing ring, mount the shift fork, and check whether the driving/driven shaft can rotate freely
5) Mount the shift arm

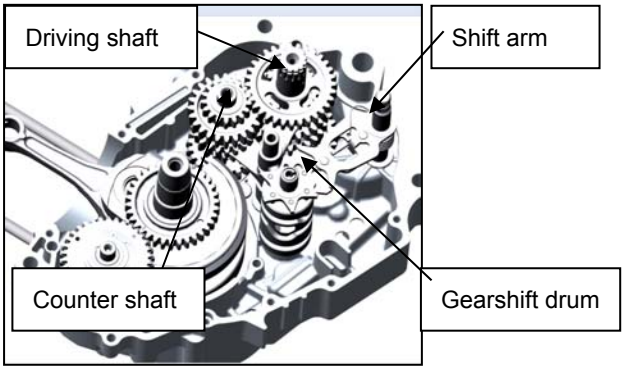


6) Replace it with a new paper pad assembly one while assembling ， mount the left hand crankcase(See “Installation of crankcase")

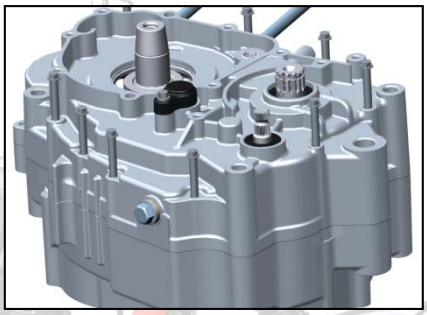

⚠**Notice:**

***Only assemble when the temperature reaches 106 ℃, otherwise it can’t be assembled. Never forcefully strike it!***

## Removal and installation of driving shaft and driven shaft and gearshift drum and shifting shaft

Attention: the washer, retainer, etc. must be assembled in place at the correct positions, the spare parts 8 apply lubricating oil. while assembling

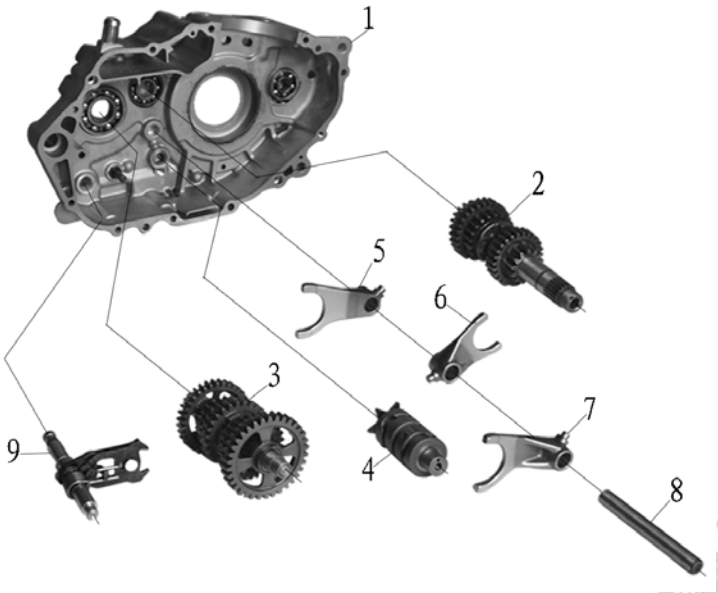


| No. | Procedure | Quantity | Remarks |
|---|---|---|---|
| | **Sequence of disassembling** | | **Assembling is in the reverse order of disassembling.** |
| 1 | Left hand crankcase | 1 | |
| 2 | driving shaft | 1 | Apply engine oil while assembling |
| 3 | driven shaft | 1 | Apply engine oil while assembling |
| 4 | gearshift drum | 1 | Apply engine oil while assembling |
| 5 | Shift fork(left) | 1 | Apply engine oil while assembling |
| 6 | Shift fork(middle) | 1 | Apply engine oil while assembling |
| 7 | Shift fork(right) | 1 | Replace it with a new one while assembling |
| 8 | Shift fork shaft | 1 | Apply engine oil while assembling |
| 9 | gearshift drum | 1 | |

## Check

Check the driving/driven shaft gears for serious abrasion and pit corrosion; check whether the shift fork is bent and whether the gearshift drum guiding slot is damaged.

Driving/driven shaft inspection

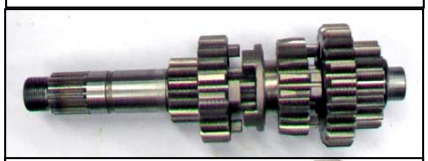

Shift fork shaft inspection

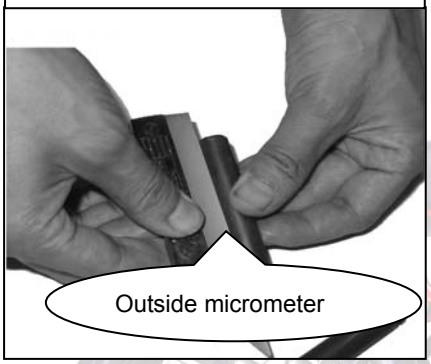


Gearshift drum inspection

Measure the shift fork claw thickness.

**Maintenance limit: ⩾5.80mm.**

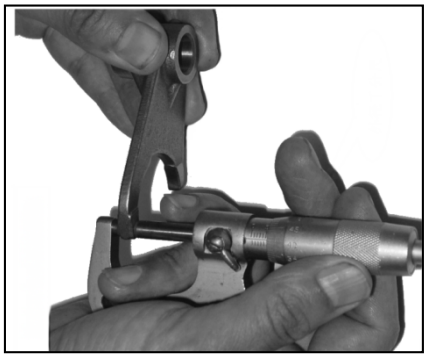

## Shift mechanism

**To remove the shift mechanism**

1) Removal of left hand crankcase cover(See “Removal of left hand crankcase cover ").

2) Remove the unloaded rotor assembly, left crankcase assembly(See “Removal of left hand crankcase cover ").

Mount the left crankcase assembly

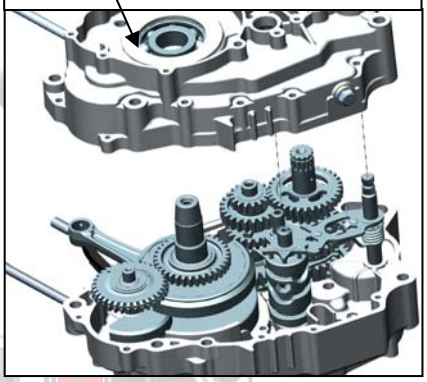

3) If only remove unloading gear arm, is not required to remove unloading gear drum assembly can be directly drawn outward shift arm combination.

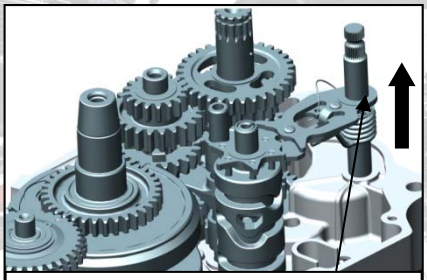

Pull out the shift arm combination

**To mount the shift mechanism**

1) Mount the gearshift arm combination

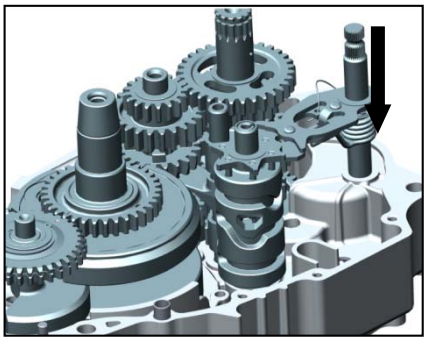

2) Mount the left crankcase body combination（Use oil seal guide to protect oil seal）

3) Mount the rotor assembly(See “Mount of left hand crankcase cover ").

4) Mount the left hand crankcase cover(See “Mount of right crankcase cover ").

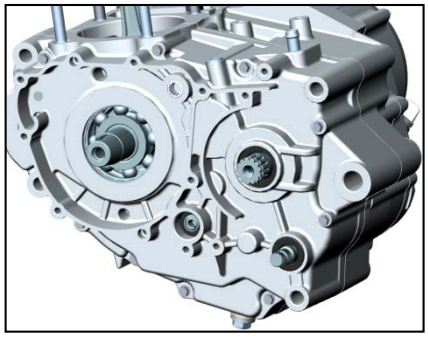

**Warning**

***Thread retaining adhesive LOCTITE243 must be applied to the rotor retaining nut M12 while assembling, with the tightening torque being 45N.m***

# 10. Frame and exhaust system

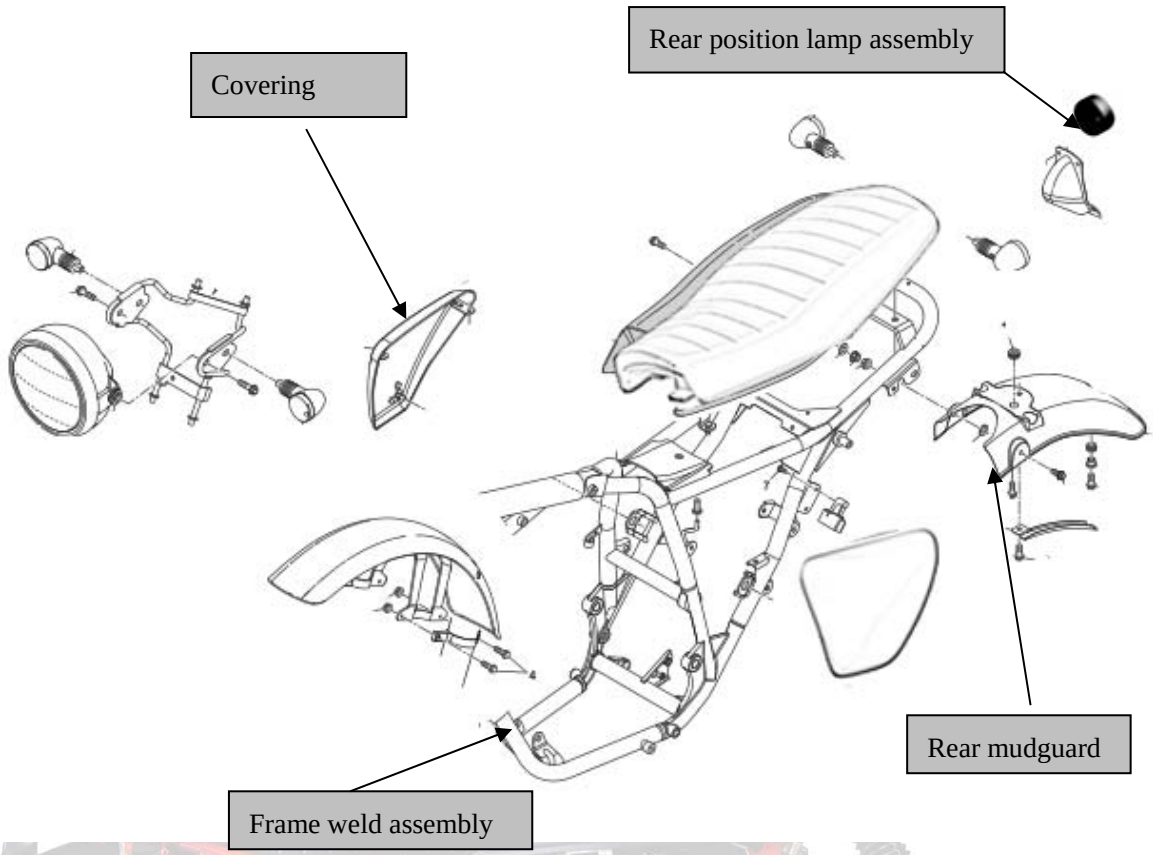

# Frame and exhaust system

| | |
|---|---|
| Maintenance notice | Removal and installation of rear mudguard |
| Troubleshooting | Removal / installation of exhaust muffler |
| Coverings, headlamp and meter | Rear position lamp assembly |

## Maintenance notice

To carry out the maintenance stated herein, take special care of the scratches and damages to the coverings, meter and light fittings.

Removing or repairing the parts and components before the exhaust system is cooled down may cause serious burn injury.

This section mainly includes the removal and installation of the complete vehicle's coverings, rear mudguard, exhaust muffler, radiator and lamps.

## Troubleshooting

- Excessive exhaust noise

The exhaust system is damaged;

Air leakage;

- Abnormal operation

Exhaust system deformed;

Air leakage;

Muffler clogged.

## Maintenance of Frame

| Component description | Damage form | Trouble symptom of component | Trouble symptom of motorcycle | Repair method |
|---|---|---|---|---|
| Frame | The frame is deformed or broken. | The frame is deformed or broken. | Running off-tracking | Calibrate or replace frame |
| Main stand | Deformation or fractured | Deformation or fractured | Effect of parking | Replace the main stand |
| | Return spring is fractured | Main stand impossible to return | Effect of parking | Replace the return spring |
| Covering parts | Broken | Broken | Effect the appearance | Replace or repair Covering parts |

| | | | | |
|---|---|---|---|---|
| Fender | Damaged | Broken | Effects of fender effect | Replace the fender |
| Seat | Broken | Broken | Decrease of the comfortable | Replace the seat |
| Footrest | Broken and deformation | Broken and deformation | | Replace the footrest |

## Maintenance of Exhaust Muffler

| **Component description** | **Damage form** | **Trouble symptom of component** | **Trouble symptom of motorcycle** | **Repair method** |
|---|---|---|---|---|
| Exhaust pipe gasket | The gasket is broken. | Exhaust pipe leakage. | Engine exhaust noise is too loud. | Replace the exhaust pipe gasket. |
| Exhaust muffler | The muffler case is broken. | The muffler case is broken. | Engine suction noise is too loud. | Replace the exhaust muffler. |

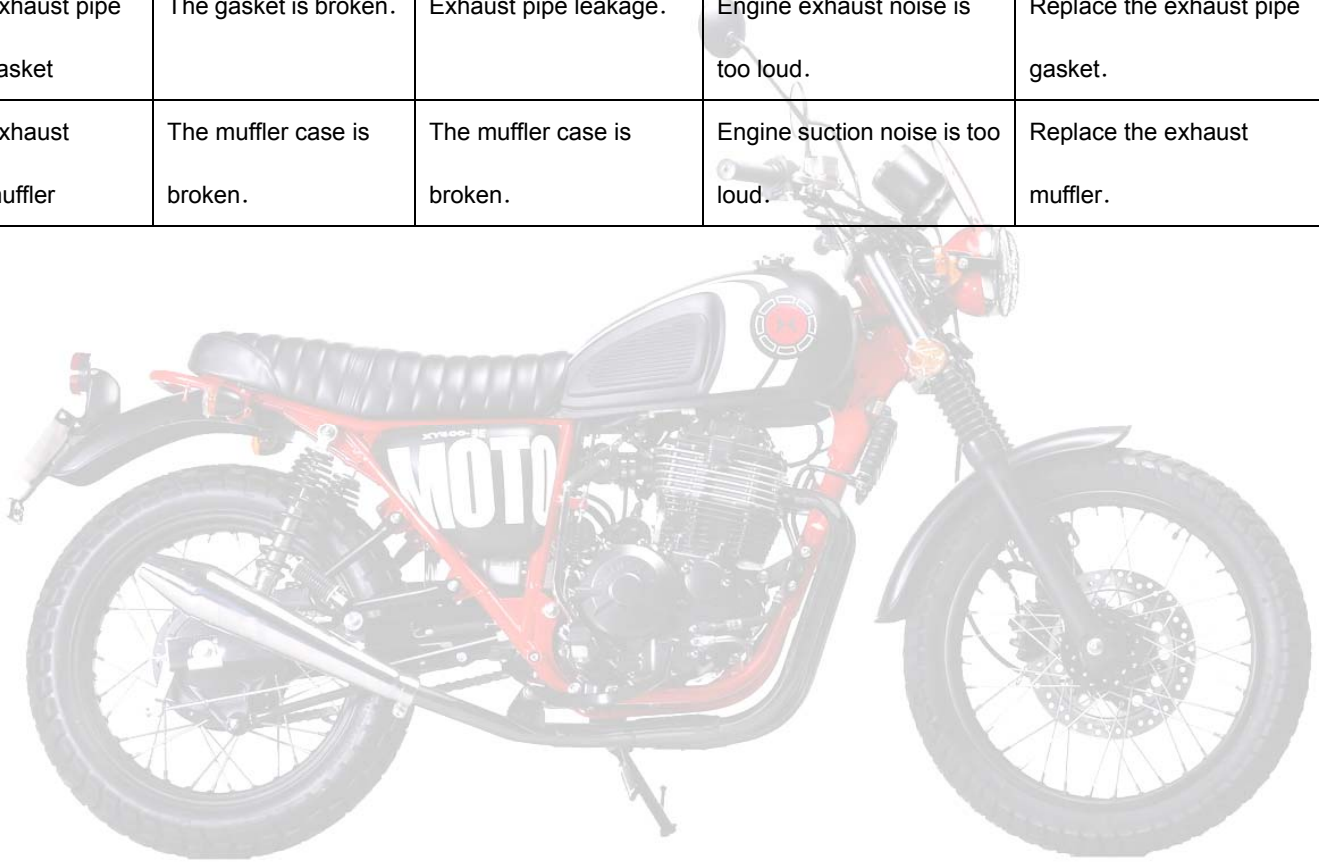

## Maintenance of Frame and Accessories

- Overall structure of frame is shown in fig. check welding part whether is come off and frame is distorted.
- Overall structure of side stand is shown in fig and check it whether is distorted.
- Dismantle side stand bolt to check it whether is distorted.

- Dismantle front and rear footrest bolt to check welding part of footrest whether is broken.

- Check front footrest whether is broken.

- Check rear footrest whether is broken.

- Check front fender whether is damaged.

- Check rear fender whether is damaged.

- Check left and right side cover whether are damaged or mouting plug whether is broken.

- Check seat rubber whether is cracked or worn.

## Side cover and seat

- Remove the two nut, remove the seat.

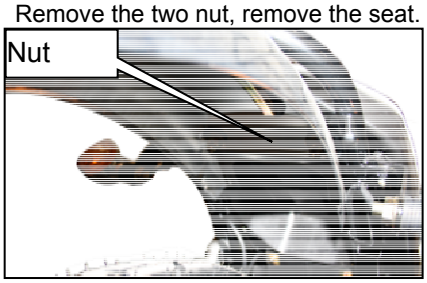

- Remove the left/right side cover assembly. Handle it carefully in order to prevent scratching the exterior decorating surface.

## Remove the headlamp

- Remove the 2 connecting bolts in the headlamp bracket.

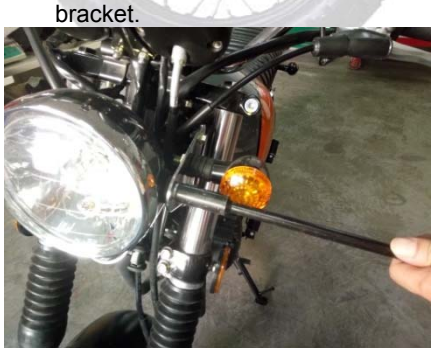

- Remove the 2 connecting screw in the front face of the motorcycle.

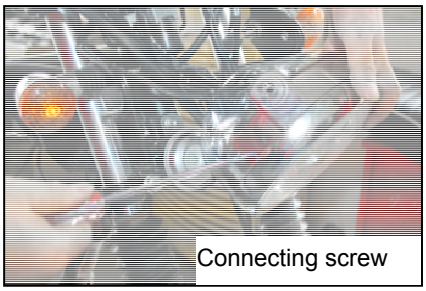


- Pull off the headlamp patch plug to remove the headlamp.

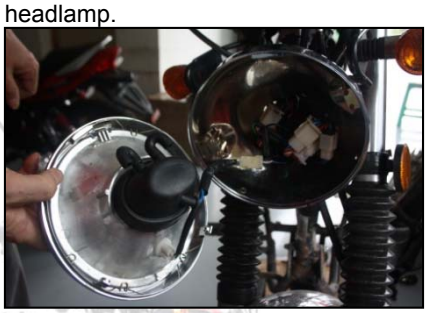

- Pull off the left/ right turn lamp connecting wire from the headlamp bracket.

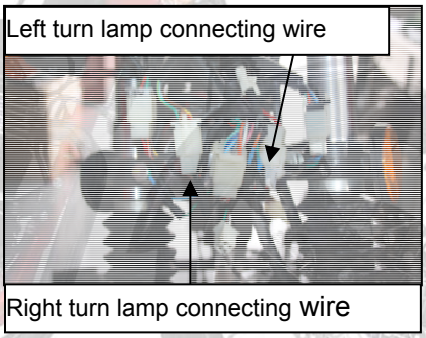


**To mount the coverings, headlamp and meter:**

The installation of the coverings, headlamp and meter is in the reverse order of removal. During installation, do not scratch the coverings or damage the bulb.

⚠ **Notice**

***During removal and installation, do not scratch the outer surface of coverings or break the buckle mortise.***

**Combined rear position lamp**

✧ - Undo the two screws and remove the tail-lamp.

✧ - Taillights are for LED without maintenance。

**Turn signal light**

✧ Loosen the screws（1）, remove the lamp lampshade （2）

✧ Lightly press bulb（3）, rotate in counter-clockwise.

✧ Install new bulb in opposite order as below.

✧ Turn lamp bulb specifications:12V10W

## Remove the meter

- Remove the meter assembly (total of 2 connecting bolts).

## Dismantle/Mantle and check of air exhaust system

**To remove the exhaust muffler:**

- Park the motorcycle on the plane ground with main stand; pull off the oxygen sensor patch plug.

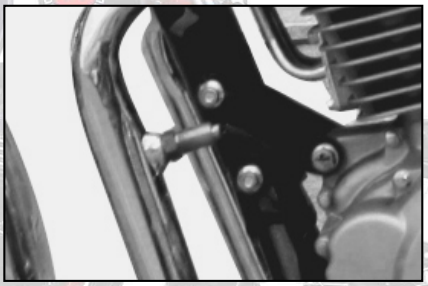

- Dismantle the suspension bolt on the muffler, check whether it is sliding.

- Dismantle muffler connecting nut, check whether the nut and bolt is sliding.
- Dismantle the muffler, check whether the washer is damaged.

**To mount the exhaust muffler:**

Installation is in the reverse order of removal.

The muffler seal gasket at the engine's exhaust port shall be replaced with a new one.

While mounting, apply sealants at the joining part of the exhaust pipe and the muffler, and fasten the bolts of the exhaust port and muffler support after the joint anchor ear bolt is screwed up, otherwise air leakage may occur.

⚠ **Notice:**

***Proceed with the operation after making sure the muffler is completely cooled down, otherwise burn injury may occur.***

## Maintenance of Control System

**Disassemble, assemble and check control**

1) Dismantle right handle bar switch and check throttle handle whether is damaged then fill lubrication oil

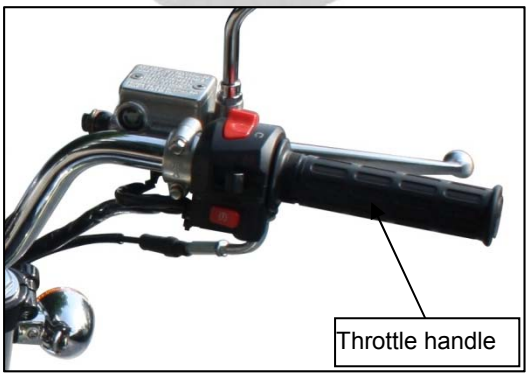


2) Take out throttle cable and check it whether is worn and fill lubrication oil.

3) Check front brake stroke whether is over big.

4) Check front brake oil pipe whether leak oil.

5) Dismantle clutch cable.

6) Check cable whether is flexible.

7) Adjust clutch and check clutch whether it declutch.

8) Adjust rear brake and check it whether it return or

stroke is over big.

9) Adjust clutch handle free stroke to10mm-20mm.

Adjust front brake handle to10mm-20mm.

Adjust rear brake free stroke to15mm-25mm。

# 11. Front wheel, front suspension device and steering stem

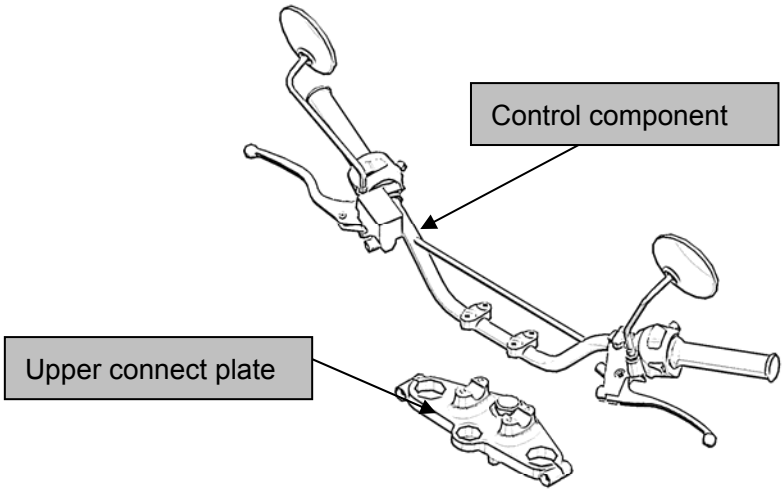


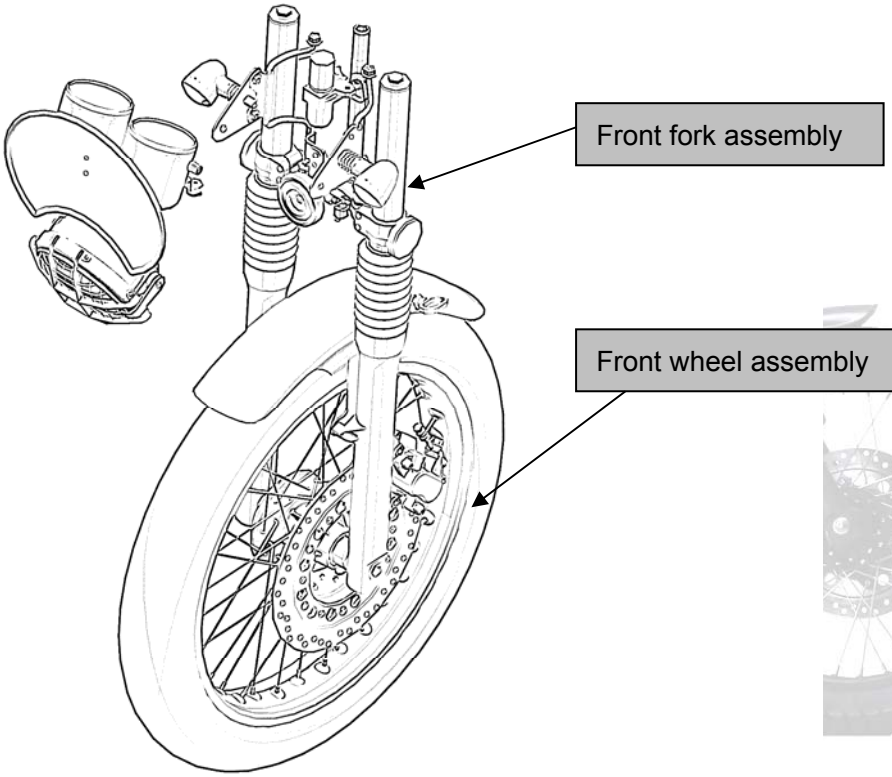

# Front wheel, front suspension device and steering stem


| | |
|---|---|
| Maintenance notice | Front suspension device |
| Troubleshooting | Front brake |
| Control subassembly | Steering stem |
| Front wheel | |


## Maintenance notice

This section introduces the removal, installation and maintenance of the front wheel, front suspension device (front fork), front brake and steering stem. While repairing the front wheel, reliably support the motorcycle from under the engine with a jack or other supports to lift the front wheel above the ground.

**Key torque values**

| | |
|---|---|
| Front wheel spindle | **50N·m -60N·m** |
| Steering handle set bolt | **20～30N.m** |
| Front fork vertical pipe cap nut | **50～60N.m** |
| Upper / lower connection plate set bolt | **8～12N.m** |
| Brake disc fastening nut | **20～30N.m** |

## Troubleshooting

- Steering unstable

  1) Vertical pipe bearing failure

  2) Tire pressure insufficient

  3) Tire damaged

  4) Wheel bush damaged

- Driving directions to the side or not to walk in a straight line

  1) Left / Right damper adjustment uneven

  2) Front fork bent

  3) Front wheel spindle bent or wheel mounted improperly

  4) Wheel bearing damaged

  5) Wheel bush damaged

- Front wheel run out

  1) Rim bent or deformed

  2) Wheel bearing worn

  3) Wheel spoke deformed or slacked

  4) Front wheel spindle slacked

  5) Tire damaged

- Wheel hard to rotate

  1) Wheel bearing or bush damaged

  2) Adjusting nut over-fastened

  3) Tire pressure insufficient

  4) Shift fork bent or damaged.

- Insufficient suspension device rigidity

  1) Insufficient front fork spring

  2) Insufficient hydraulic oil refilled in the front fork

- Poor brake performance

  1) The brake is not adjusted as per regulations

  2) Brake shoe worn

  3) Brake shoe has water or oil stain

## Maintenance of Control system

| Component description | Damage form | Trouble symptom of component | Trouble symptom of motorcycle | Repair method |
|---|---|---|---|---|
| Steering handle | The steering handle is deformed | The steering handle is bent and deformed. | Off-tracking in running. | Correct or replace steering post |
| Clutch handle | Over small of the free stroke | | Clutch is slipping | Readjust the free stoke |
| | Over big of the free stroke | | The clutch is not fully disconnected | Readjust the free stoke |
| Clutch control steel cable | The steel cable is ineffective in cable casing. | The clutch handle is impossible to control or return to the position with difficulties | Clutch slipping or is not fully disconnected | Clean、lubricate or replace control steel cable |
| | The steel cable | | The clutch is slipping or not fully disconnected | Replace control steel cable |
| Rear brake pedal | The free stroke is over small. | | The clutch is not fully disconnected. | Readjust the free stoke |
| | The free stoke is over big. | | Disoperation of rear brake | Readjust the free stoke |

## For the damage form, fault symptom and repair method of front wheel

| Component description | Damage form | Trouble symptom of component | Trouble symptom of motorcycle | Repair method |
|---|---|---|---|---|
| Front wheel | Front wheel rim is deformed | Front wheel rim is deformed. | Off racking in running. steering handle vibrates of shakes in running | Replace front hub |
| | The hub bearing hole is over worn | The bearing block hole has a loose match with the bearing. | Off racking in running. steering handle vibrates of shakes in running | Replace front rim |
| | Bearing is over worn or damaged. | The axial and radial gaps of bearing inner and outer rings are too big or is insufficient rotation. | Off racking in running. steering handle vibrates of shakes in running | Replace front bearing |
| Front tire | The tire is pricked or broken | Front tire has very low pressure | Inflexible of direction handle, insufficient engine output | Repair or replace tire |

| | | | | |
|---|---|---|---|---|
| | The tire is over worn(the tire vein depth is less than 2mm) | | It is possible to slip and has a poor slip proof function | Replace outer tire |
| Speedometer gear box | Gear is damaged. | | The indicator of the speedometer fails to move | Replace speedometer gear box |
| | The gear drive ring is damaged. | | | |

## Maintenance of Front Shock Absorber

| Component description | Damage form | Trouble symptom of component | Trouble symptom of motorcycle | Repair method |
|---|---|---|---|---|
| Front shock absorber spring | The elastic force is Insufficient or broken | The elastic force of shock absorber is Insufficient or broken | Front shock absorber is over Soft, abnormal sound comes out in case of front absorber working | Replace front shock absorber spring |
| Front shock strut | Bending and deformation | Front shock strut is bent and deformed | Off-track in running | Correct or replace front shock strut |
| | Working stroke surface is damaged or scratched | Leakage from oil seal | Leakage at front shock cylinder | Replace front shock strut |
| | Working stroke surface Cr coating partial is worn out to expose the substrate | Leakage from oil seal | Leakage at front shock cylinder | Replace front shock strut |
| Front shock cylinder | Broken deformed and damaged | Leakage at front shock cylinder | Leakage at front shock cylinder | Replace front shock cylinder |
| Piston rod | Over worn or damaged | | Over soft at front shock cylinder | Replace piston rod |
| | Piston ring is over worn or damaged | | Over soft at front shock cylinder | Replace piston ring |
| Oil sealing | Cut edge is over Worn or damaged or aged | Leakage from oil seal | Leakage at front shock absorber | Replace oil seal |
| Shock oil | Insufficient oil amount or too little | Insufficient shock oil or too little | Over soft of front shock absorber | Fill shock oil as per the specified stipulate |

## Maintenance of Steering Post

| Component description | Damage form | Trouble symptom of component | Trouble symptom of motorcycle | Repair method |
|---|---|---|---|---|
| Steel ball socket | Over tight of steering stem screw | Too small gap between steel ball and steel ball steering ring | Steering handle is ineffective. | Adjust the steering post screw by tighten wrench till the steering post moves left and right flexibly and no axial shifting between steering post and frame stand pipe |
| | Over worn, pockmark, indentation, crack and damage of steel ball steering ring ball track | | Ineffective steering handle or handle shakes or vibrates during running | Replace complete steel ball steering ring |
| Steel ball | The steel ball is worn, deformed and damaged. | | Ineffective handle steering or handle shakes or vibrates during running | Replace all steel balls |
| Steering stem | The steering stem is deformed | The steering stem is deformed. | The steering stem is deformed. | Replace steering stem |

## For the damage form, fault symptom and repair method of front brake

| Item | Damage form | Trouble symptom of component | Trouble symptom of motorcycle | Repair method |
|---|---|---|---|---|
| Front brake main pump assembly | brake 1iquid is insufficient | brake liquid is insufficient | brake lose effect | fill DOT4 to upper limit mark |
| | dirty brake liquid | | brake lose effect | Replace the brake fluid |
| | surface of wall is damaged | | brake lose effect | |
| | wall is over worn | | brake lose effect | replace main pump |
| | oil case is cracked | oil leakage | brake lose effect | replace main pump |
| | piston surface is cracked | | brake lose effect | replace main pump piston |
| | piston is damaged | | brake lose effect | replace main pump piston |
| Front brake caliper | air entry into oil pipe | | brake lose effect | exhaust front brake oil way |
| | oil pipe is broken | oil leakage from oil pipe | brake lose effect | replace oil pipe |

| | | | | |
|---|---|---|---|---|
| | front brake oil pipe is clogged | oil pipe is clogged | brake lose effect | clean or replace oil pipe |
| | wall is broken or cocked | | brake lose effect | replace front brake caliper |
| | wall is over worn | | brake lose effect | replace front brake caliper |
| | front brake caliper is broken | oil leakage from front brake caliper | lose effect | replace front break caliper |
| | seal ring is broken or worn | oil leakage | lose effect | replace front break caliper |
| | friction plate is over worn | | lose effect | replace friction plate completely |
| | surface of piston is damaged or worn | | abnormal sound or lose effect | replace brake caliper piston |
| | guide pin is clipped | | front break lose effect or spring cannot be returned | clean or lubricate guide pin |
| Front brake disc | over worn(1ess than limit value3mm) | | front brake lose effect | replace front brake disc |
| | distorted | | abnormal sound or lose effect | replace front brake disc |

## Control subassembly

1、Remove the left/right balance weight.

2、Remove the right handle and right combination switch

- Pull off the brake switch leads

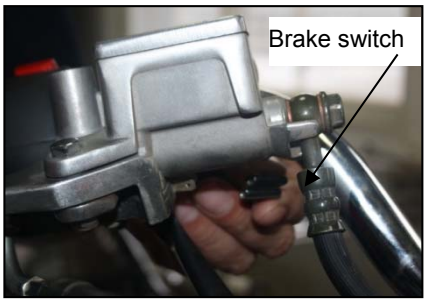


- Remove the upper/lower body of the right combination

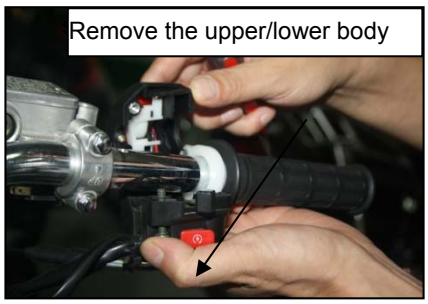


- Remove the throttle control line

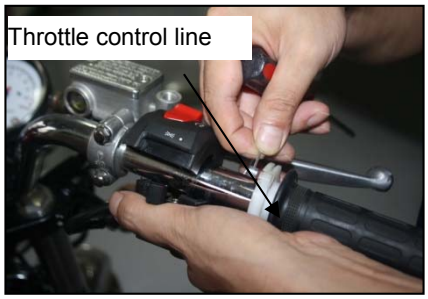


- Remove the right combination switch

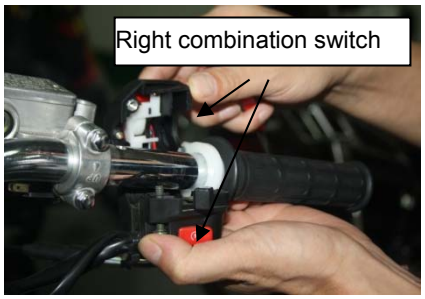


- Remove the right brake cylinder body.

- Remove the clutch control line and disassemble the connection of the clutch switch leads and the main cable.

- Remove the left combination switch.

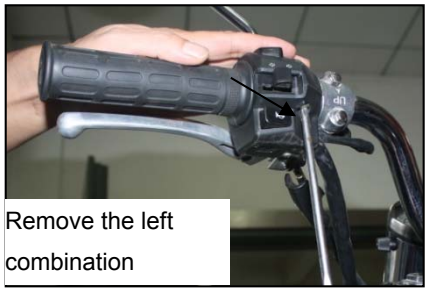

- Loosen the retaining bolt and remove the clutch handle holder.

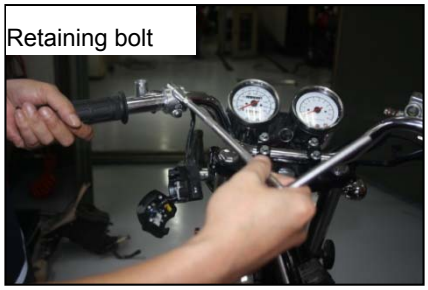


- Remove the clip and take out the grip tube

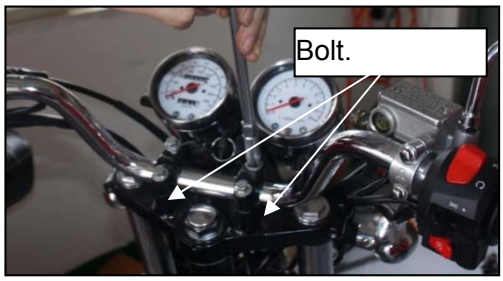


## To install the control subassembly

1) Installation is in the reverse order of removal. While installing the brake cylinder body, make sure the cylinder is in the same height as the original mounting position to prevent air from entering the main fuel cylinder, thus influencing the braking performance. Do not twist the braking hose.
2) While installing, the clutch handle holder and the front brake cylinder body notch shall be aligned with the mark point of the grip tube, and the pins of left/right combination switch shall be blocked into the pin holes of the grip tube.
3) Steering column opening and a handlebar tube positioning point alignment,, and fasten the bolt at the connection board, and then the bolt at direction of the tube, up to the torque of 20-30N.m.
4) Do not mount the throttle cable in the opposite direction of the feeder on the right handle, otherwise the handle may rotate incorrectly while refueling.
5) Upon installation, adjust the throttle control line. Upon installation, check whether the cable and wiring is in accordance with the wiring diagram.

## Maintenance of wheel

Support the motorcycle with a jack to lift the front wheel above the ground.

Dismantle nut of front wheel axle and check it whether is distored.

Dismantle front wheel and take off front wheel axle bush

Take out oil seal to check edge whether is worn or broken.

Take out the front wheel. Lift the front fork as high as possible while taking out the front wheel, to avoid damaging the front mudguard.

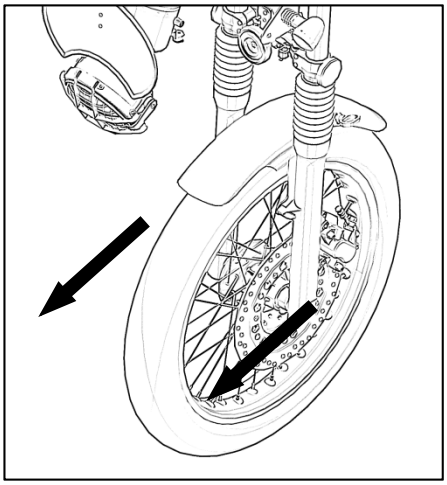

**To mount of the front wheel**

While installing, fasten the front wheel spindle nut to the required torque of 50-60N.m

**Warning**

***The front wheel spindle must be firmly screwed up to the required torque of 50-60N.m.***

## Disassembly and assembly of front wheel

Disassemble and assemble the front wheel according to the following diagam.

After the bearing is removed, replace with a new bearing along with dust seal.

Take out rear wheel and check there are parts damaged and check width, pressure of tire tread.

Check odometer teeth whether is worn or damaged and fill grease.

While assembling the brake disc, apply small amount of thread retaining adhesive LOCTITE243 on the threads of the screw, with tightening torque being 20-30N.m.

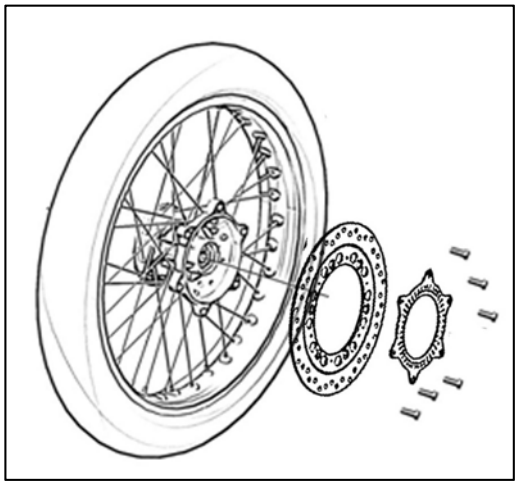

**Warning**

***The brake disc retaining screw must be coated with thread retaining adhesive, with the tightening torque being 20-30N.m. Otherwise, it may cause a personal safety accident.***

## Front wheel spindle inspection

Dismantle front wheel axle nut and take out rear wheel axle to check it whether is distored.

Place the front wheel spindle on the V-holder, and measure the deflection of the wheel spindle with a dial gauge; if the reading is no less than 0.2mm, replace the front wheel spindle.

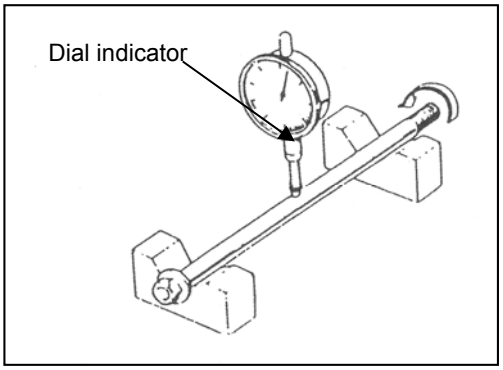


## Front wheel bearing inspection

Check bearing whether is worn or damaged and dismantle front wheel axle bearing.

Place the front wheel on the calibration table, inspect the rim's deflection, and then manually rotate the wheel and measure its deflection value with a dial gauge; if the reading is no less than 2mm, replace the wheel bearing.

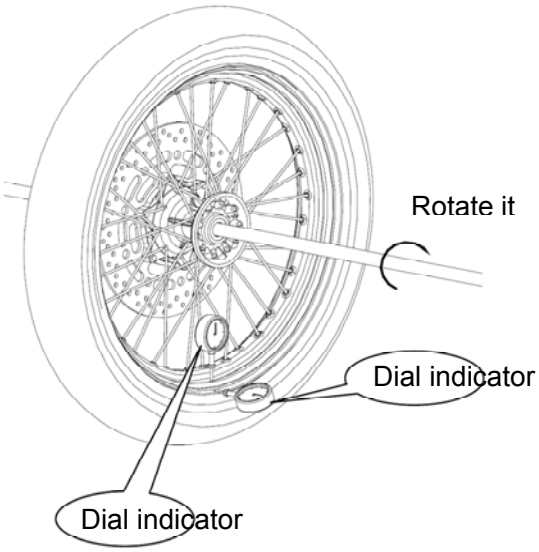

# Disassemble, assemble and check front absorber

## Front suspension device

Dismantle front wheel axle nut then check nut whether are damaged.

Dismantle front fender and take off front absorber.

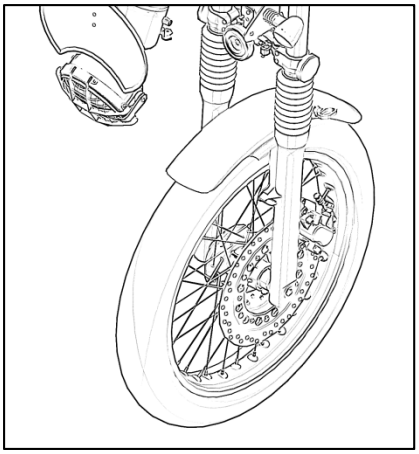

Remove the front brake caliper and wire clip

Remove the wire clip and speed sensor

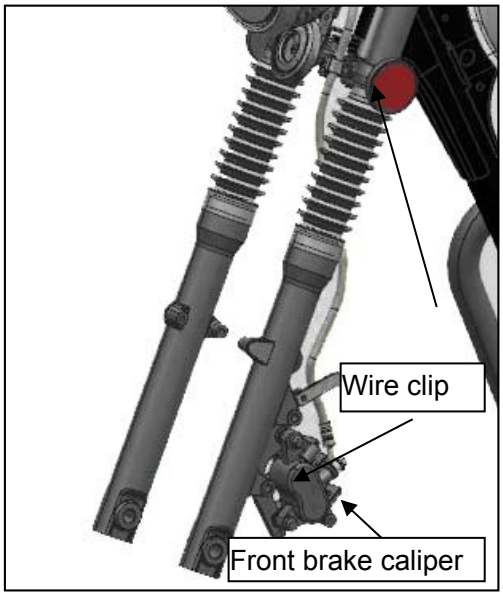


Unscrew the upper / lower connection plate bolt and. the direction of the tube bolt

Pull off the front damper

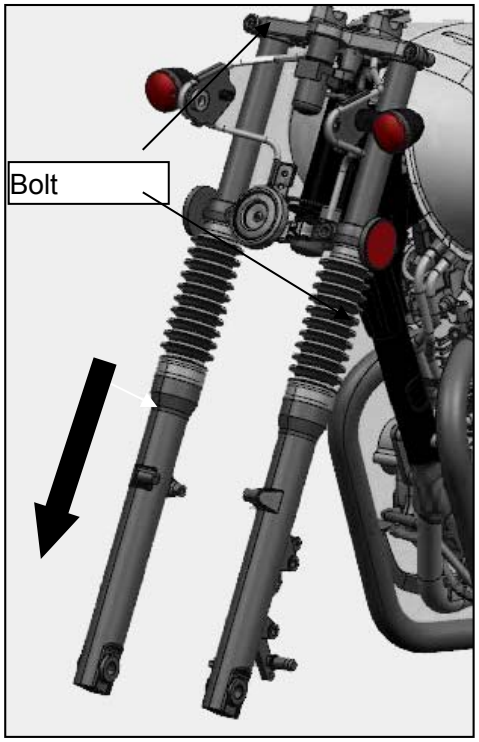


## To install the front fork:

Installation is in the reverse order of removal.

⚠ **Notice**

***While removing the front brake caliper, if it is unnecessary to replace, never nip the front brake handle. While installing the front brake caliper, apply the thread retaining adhesive LOCTITE 243, with the tightening torque being 20-30N.m***

## Check

1) Dismantle oil drain bolt and check bolt whether or not is loose.
2) Drain off absorber oil and check quality whether or not is turned.

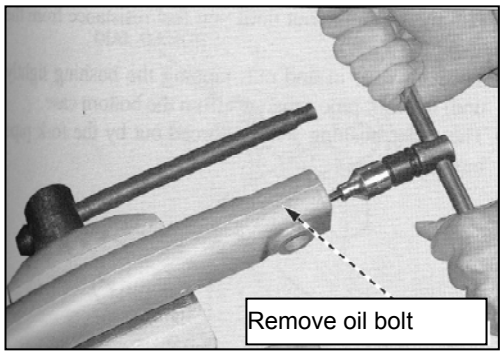

3) Take off dust sleeve, circlip and oil seal to check edge whether or not is worn and circlip is distorted.

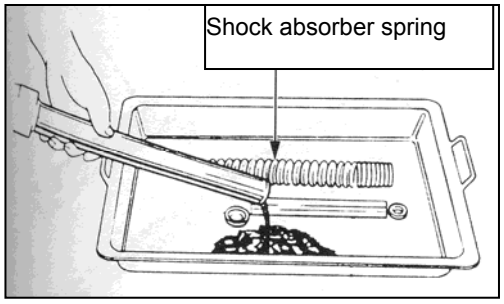


4) Oil seal assembly: in primary lip and the dust lip between coated with lubricating grease, oil seal mark up

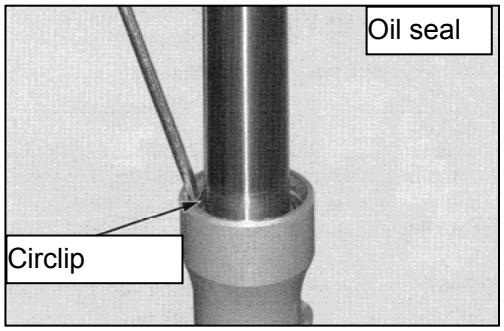


5) Check inner pipe whether or not is worn.

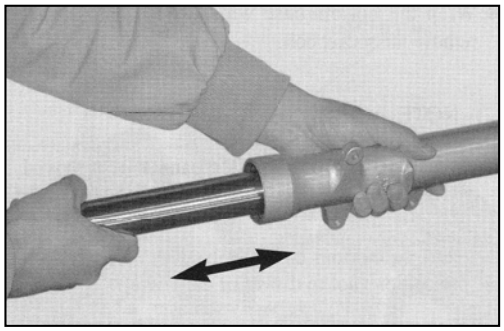

6) Dismantle circlip and return spring to check whether or not there are elasticity

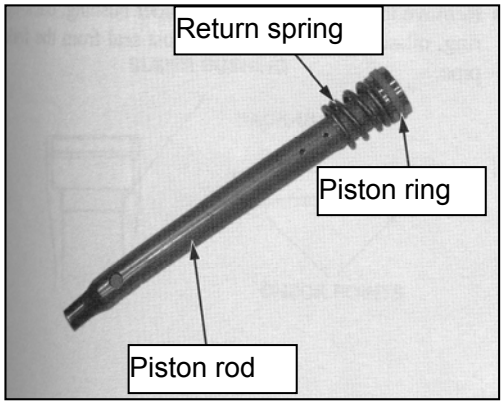


7) Measure internal diameter to check whether or not is it worn.

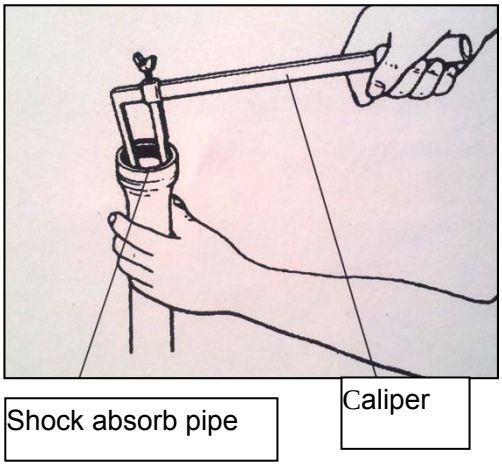


8) Measure free length of absorber spring and check it whether or not is distorted.490mm

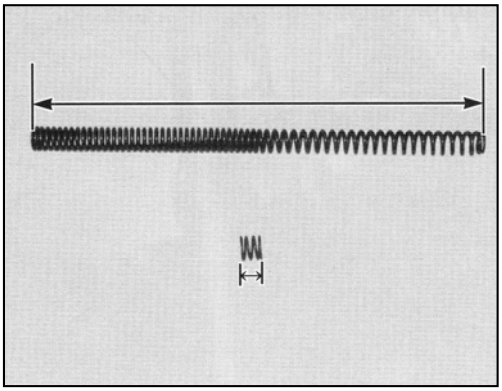

9) Check length of return spring to check it whether or not is distored.29mm

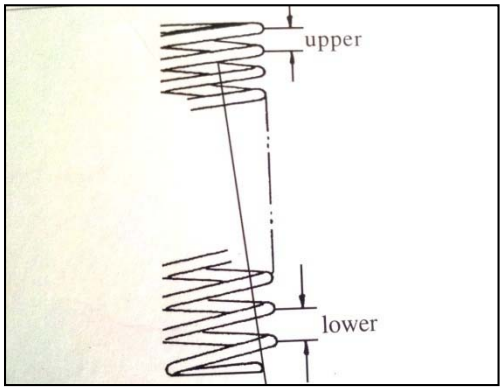

10) Fill absorber oil per standard.

Oiling quantity: 250 ± 2ml/, the brand is CN1# shock absorber oil, injected before the strict filtering, does not allow water, s

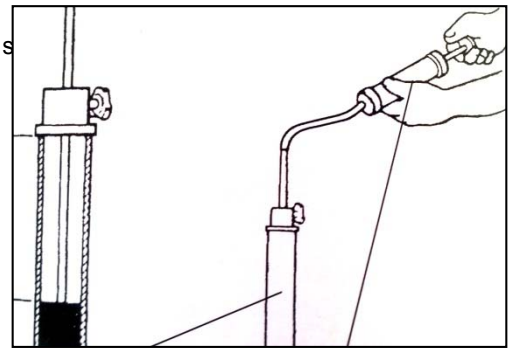

## Maintenance of Suspension

**Steering stem**

1) Park the motorcycle on the plane ground, and remove front wheel, front fork and grip tube (control subassembly) of the whole vehicle. Refer to the related sections

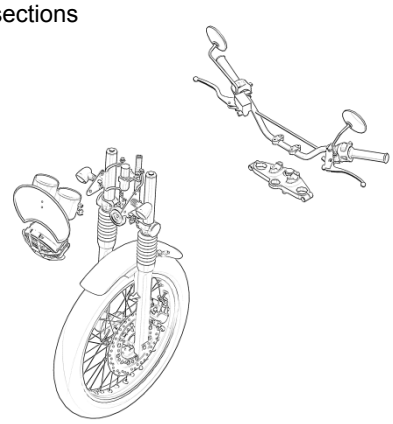

2) Remove the upper connect plate

Check steering stem, rotate teeing stem to check bearing whether is worn.

Unscrew lock nut to check it whether is damaged.

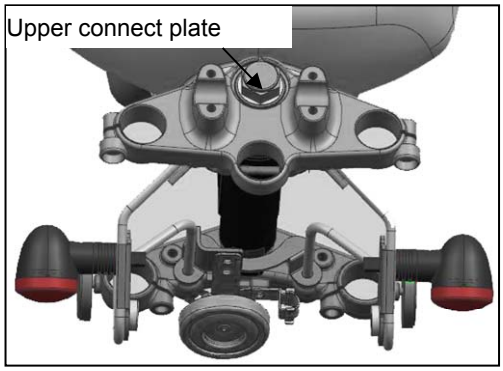


3) Use special socket for lock nut Unscrew the lock nut.

Unscrew steering stem lock nut whether is damaged.

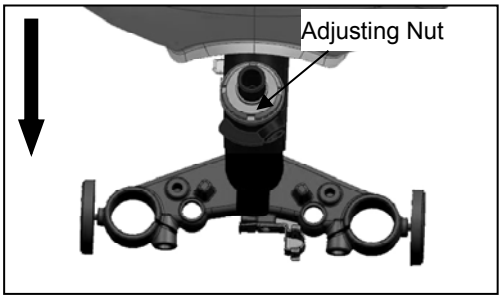


4) Lower steering stem

Dismantle and mount outer seat ring of vertical pipe and check outer seat ring whether is worn.

Dismantle and mount inner seat ring and check whether is worn.

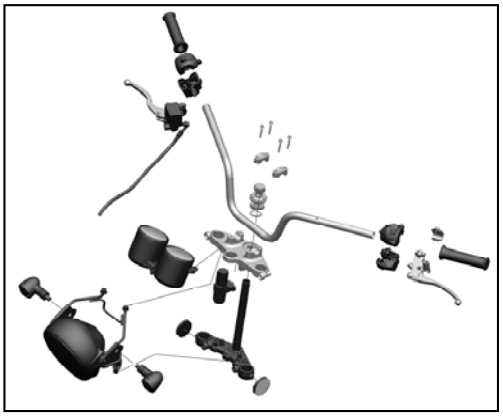

### To mount of steering stem

Installation is in the reverse order of removal

Mount steering stem and lay on grease.

While installing the steering stem, adjust the adjusting nut and inspect it by turning it left and right and moving it up and down to ensure no vertical play and flexible rotating laterally.

Tighten the cap nut to the required torque of 60-70N.m.

## Front brake

(1) The front brake lever should have a free operating stroke of 10-20mm as shown in the next figure.

(2) Adjustment of the free travel at the hand brake lever The free travel at hand brake lever may be readjusted by correcting the adjusting bolt【B】. The position of the point of pressure can be adjusted in this way to fit any hand sizes.

(3) After adjustment, the groove of the adjusting nut should be aligned with the pin of the brake arm.

The fluid level in the pump reservoir may never drop below the minimum notch (LOWER) (1) shown on the clear reservoir

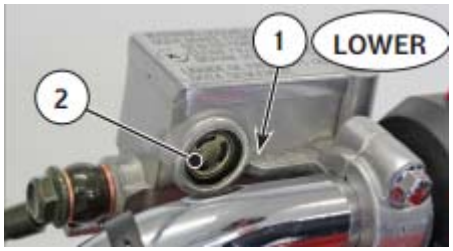


### Front brake caliper inspection

1) Dismantle front brake caliper bolt

2) Operating brake, if the wears limit line of the brake shoe touch to the side of the brake disc. It shows that the brake shoe has touched the wear limit.

**Replace the brake shores.**

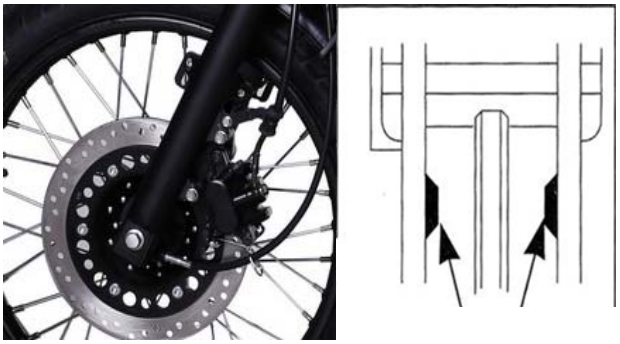

3) Take off front brake caliper and check brake shoe whether exceed limit value

Operating brake, if the wears limit line of the brake shoe touch to the side of the brake disc. It shows that the brake shoe has touched the wear limit.

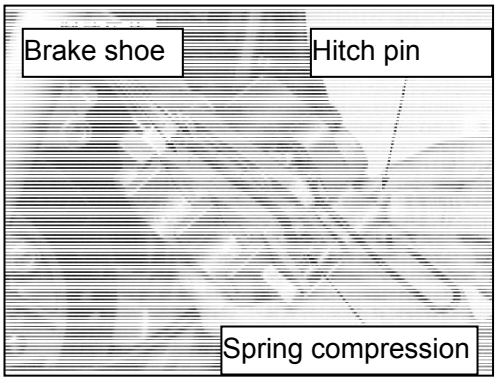


**Warning:**

***When it is replaced with a new brake strip or brake disc, do not drive it immediately; instead, drive it after holding and releasing the front brake handle until the brake strip and the brake disc are well engaged.***

### Front brake disc inspection

Measure the thickness of the brake disc with an outside micrometer; if the thickness is no more than 3mm, replace the front brake disc. Measure the run out of the brake disc with a dial gauge;

**maintenance limit:0.2mm**

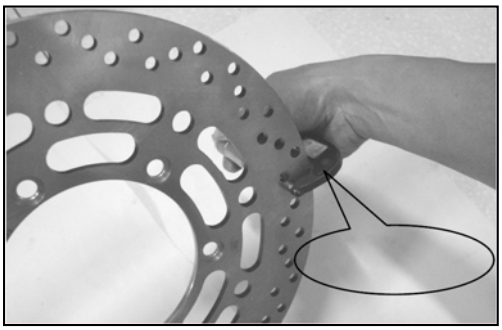

## Anti-Lock Braking system

### ABS Component

The ABS unit, installed in the middle of the frame, is composed of the hydraulic control unit, ECU control unit and the motor. The wheel speed sensors are respectively equipped on the front and rear wheels

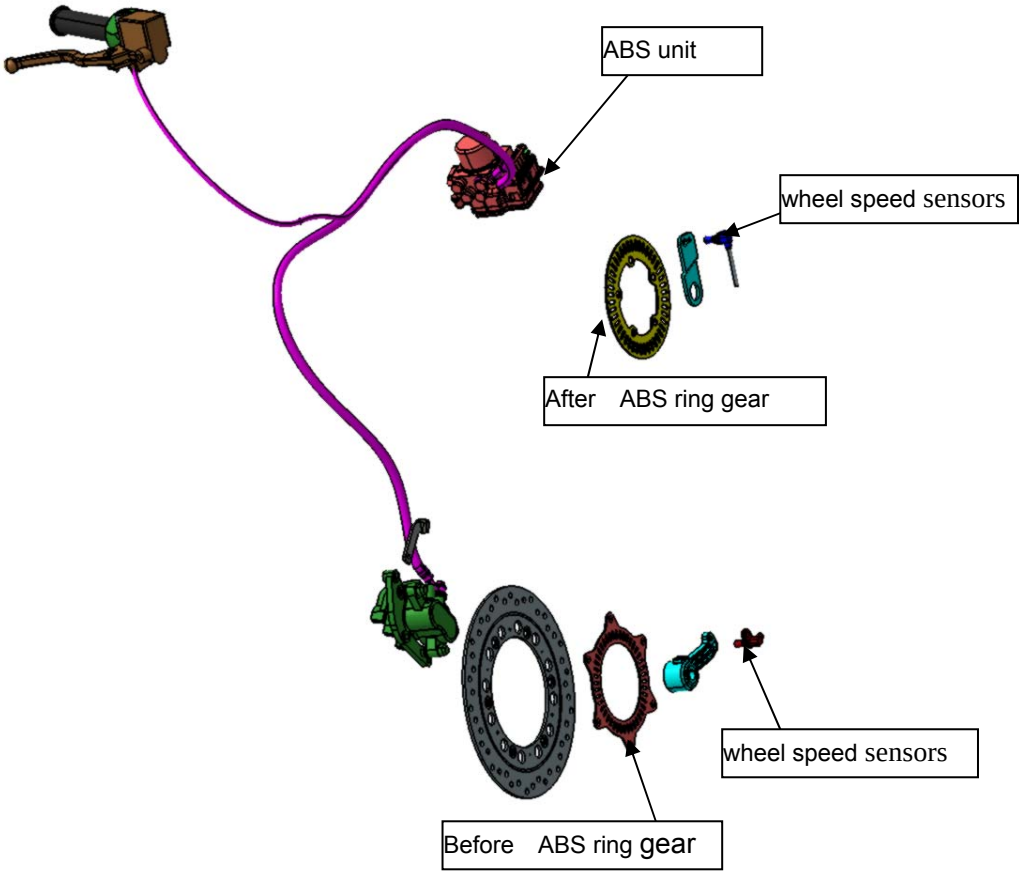


### Principle of the braking system

XY400-2AA(390M), with the front is disc while the rear is drum braking system, which defines that only the front wheel braking system has the function of ABS. In normal operation mode, the function of braking system equipped with ABS is same as none ABS braking system. Only when the front wheel tends to lock, and this information feedback to the ABS control unit by the wheel speed sensor, ABS will begin to work after recognition, then to adjust the braking pressure. We can feel this adjustment process by the mild beating on the front brake handle.

**Warning Lamp**

After ignition, ABS warning lamp is lit up, and then goes out after a short period of time.

If the ABS lamp is always on after the ignition, or suddenly light up in the process of driving, these mean that there are faults in the ABS, the ABS is disabled. But the braking system itself is still working, only the ABS control system is failed.

When the speed of the front and rear wheels difference greatly under extreme driving conditions, for example, the front wheel off the ground to performance the balance stunt or rear wheel slip, ABS warning lamp goes on, the ABS will fail. In order to reactivate the ABS, riders need to stop and close the ignition switch. If you restart the vehicle, ABS will restart.

**Disable ABS**

Customers may do not want the ABS function, but SHINERAY suggests the ABS function is always enabled。

**Conditions**: the vehicle stops and the ignition switch on。ABS off switch refers to, "ABS function from enabled to disabled" and "ABS function from disabled to enabled ". Two positions of the toggle switch relates to ABS off switch is: SET and (ABS) The factory default toggle switch located on (ABS), if the toggle switch is not on this position, please switch it to this position, then insert the key to electricity.

## State off switch as follows

To change the state of ABS, please ensure that the motorcycle has been on power; and the speed is lower than a certain value. Doing the state changing when the motorcycle stops is suggested.

1. **ABS function from enabled to disabled**

Toggling the switch to SET, the ABS lamp start blinking @400ms after 3 seconds , timing from the lights blinking, toggle the switch to (ABS) in 2 seconds, then the ABS is disabled. When the ABS is disabled, ABS warning lamp blinks @ 1200 ms.

2. **ABS function from disabled to enabled**

Steps as above, toggle the switch to SET, the ABS lamp start blinking @400ms after 3 seconds , timing from the lights blinking, toggle the switch to (ABS) in 2 seconds, then the ABS is enabled. The warning lamp is no longer blinking, but goes out.

In the above item 1、2," timing from the lights blinking,

toggle the switch to (ABS) in 2 seconds", without operation within 2 s, but after 2 s, ABS state change failed, ABS keep the current state, you can change it again.

In the above item 1、2," timing from the lights blinking, toggle the switch to (ABS) in 2 seconds", if no operation for a long time，the warning lamp will lit up after 27s, and ABS is enabled in this situation.

Regardless of the ABS is enabled or disabled, when the toggle switch is located on (ABS) , ABS is enabled automatically after reigniting the motor.

### Wrong operation instructions

1、Before the ignition, if the toggle switch is located on SET after the ignition, the ABS warning lamp will start blinking @400ms after 3 seconds. Toggling the swtich to (ABS) position after power off the motor is suggested, and then reignite the motor to ride.

2、If the warning lamp is normally on, it always means some faults appear. At this time, ensuring the toggle switch is located on (ABS), then reignite the motor. If the lamp goes out, that means ABS is enabled; elseif the lamp is still on, that means ABS is broken , you need repair it.

### ABS function impairment

- If the vehicle to be modified, for example, shorten or extend the suspension travel、using other wheels or wheel hub、wrong tire pressure、other brake lining and so on. The ABS may cannot be in the best function, except this changes are approved or recommended by SHINERAY。

### Product Advantages

- In the process of braking, the wheel is controlled within the range of reasonable slip rate to ensure the braking strength and stability of vehicle. Especially in the wet pavement, the braking safety of vehicle is enhanced effectively;
- In the process of braking, the wheels won't lock, this reducing the tire of the pure friction with the ground, and the tire wear effectively;
- With K line diagnosis function, it is easy to identify the products faults, so as the after-sales service.

### Tips For Braking With ABS

The first rule of braking with ABS: brake as though you did not have ABS.

- Pull the brake lever quickly, but not abruptly. Once the brake pads have fully engaged, increase the braking pressure quickly.
- you can feel that the ABS has been on working through a gentle pulsing on the hand and foot brake levers, as well as a tacking noise.
- When performing a full braking maneuver, always disengage the clutch at the same time.

Practice braking in the ABS control range regularly. This will allow you to use the antilock braking system to its full potential in the event of a serious incident.

**Warning**

***To ensure safety, this item is only subject to maintenance by persons from SHINERAY Service Statio***

# 12. Rear wheel and rear suspension device

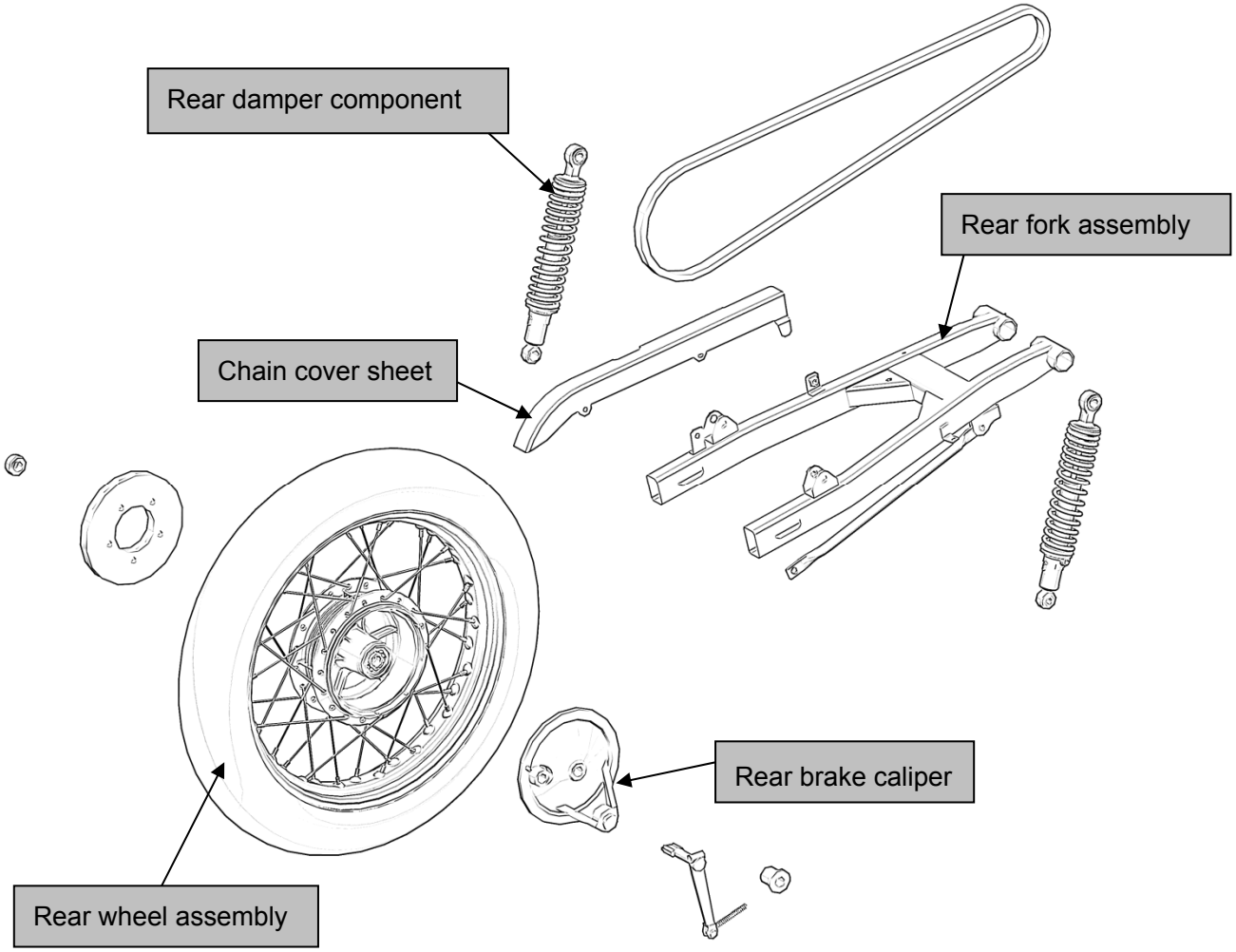

# Rear wheel and rear suspension device


| | |
|---|---|
| Maintenance notice | Rear fork |
| Troubleshooting | Rear shock absorber |
| Rear wheel | Maintenance of Rear Transmission |


## Maintenance notice

This section introduces the removal, installation and maintenance of the rear wheel, rear brake, rear fork and rear damper .While repairing the rear wheel and rear damper, reliably stand the motorcycle from under the engine a jack or other supports.

**Key torque values**

| | |
|---|---|
| Real wheel spindle nut | 60-90 N.m |
| Rear fork shaft nut | 50-60N.m |

## Troubleshooting

- **Rear wheel shimmy**

1) Rim bent;
2) Rear wheel bearing worn;
3) Low tire pressure;
4) Regulator differs between left and right;
5) Wheel bush damaged.

- **Wheel hard to rotate**

1) Wheel bearing or bush damaged
2) Wheel incorrectly mounted;
3) Rear wheel spindle bent

- **Suspension device abnormal**

1) Damper spring too stiff or too weak;
2) Rear fork bearing worn;
3) Damper bent.

- **Foreign noise**

Fasteners loosened

**For the damage form, fault symptom and repair method of rear wheels**

| Component description | Damage form | Trouble symptom of component | Trouble symptom of motorcycle | Repair method |
|---|---|---|---|---|
| Rear wheel | Rear rim is twisted and deformed. | Rear rim is twisted and deformed. | Off racking in running. rear wheel wobbles in running | Replace rear rim |
| | The hub bearing hole is over worn | The bearing block hole has a loose match with the bearing. | Off racking in running. rear wheel wobbles in running | Replace rear rim |
| | The bearing is over worn and damaged | The axial and radial gaps of bearing inner and outer rings are too big or is insufficient rotation. | Off racking in running. rear wheel wobbles in running | Replace bearing |
| Rear tire | The inner tire is pricked or broken | Rear tire has very low pressure | Inflexible of direction handle, insufficient engine output | Repair or replace inner tire |
| | The tire is over worn (the tire vein depth is less than 2mm) | | It is possible to slip and has a poor slip proof function | Replace outer tire |

**Maintenance of Rear Transmission**

| Component description | Damage form | Trouble symptom of component | Trouble symptom of motorcycle | Repair method |
|---|---|---|---|---|
| Sprocket and cam sprocket | Gear is over worn | | Drive chain has abnormal sound, drive chain is easy to fall out. | Replace sprocket and cam sprocket |
| Drive chain | Too dirty or poor lubrication | | Drive chain has abnormal sound | Clean and lubricate the chain. |
| | Improper chain tightness. | Chain is over tight | Drive chain has abnormal sound | Adjust the chain tightness to 15~25mm |
| | | Chain is over loose | Drive chain is easy to fall out. | |
| | Over worn | | Drive chain has abnormal sound, and is easy to fall. | Replace drive chain |

## Maintenance of Rear Suspension

| Component description | Damage form | Trouble symptom of component | Trouble symptom of motorcycle | Repair method |
|---|---|---|---|---|
| Rear shock absorber assembly | Rear shock absorber spring is broken or with insufficient elastic force | Rear shock absorber spring is broken or with insufficient elastic force | Rear shock absorber is over soft or over hard | Replace rear shock absorber spring |
| | Leakage at rear damper | Leakage at rear damper | Leakage at rear shock absorber，rear shock absorber is over soft | Replace rear damper |
| | Piston rod on rear damper is bent, deformed or broken | Piston rod on rear damper is bent, deformed or broken | Rear shock absorber is over hard | Replace rear damper |

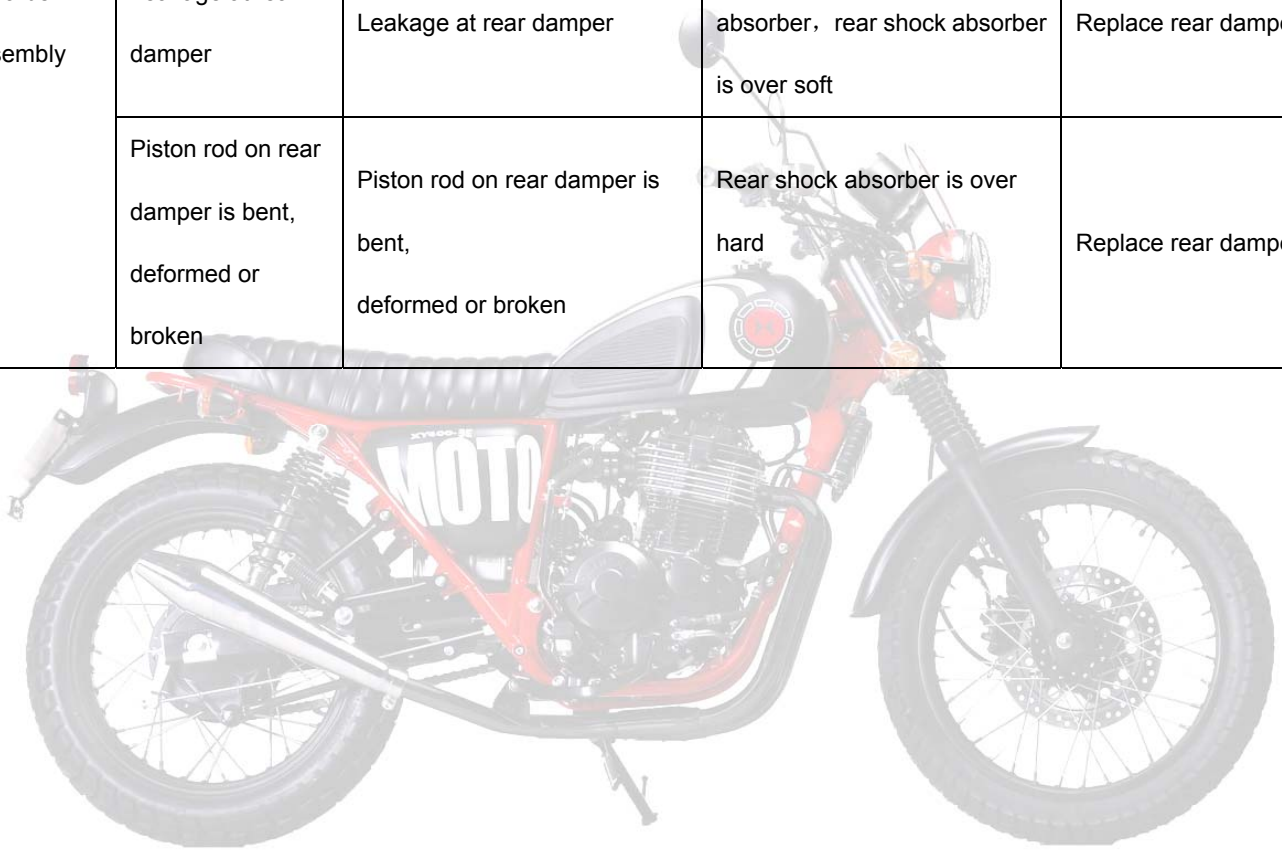

## Rear wheel

**To remove the rear wheel**.

1) Stand the motorcycle with a jack to lift the rear wheel above the ground.

2) Remove the chain set.

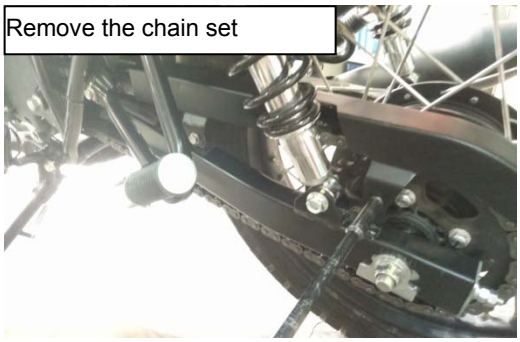


3) Unscrew the rear wheel nuts、the brake pull rod、Brake limit lever and remove the rear wheel spindle.

4) Dismantle rear wheel axle nut to check it whether is loose and damaged

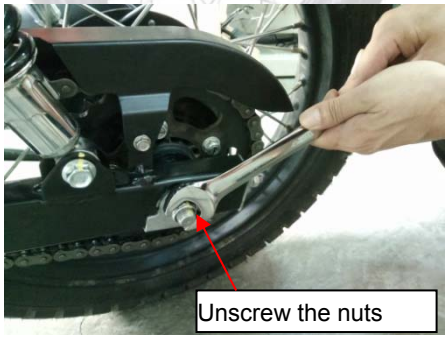


5) Remove the chain link and remove the drive chain.

6) Dismantle clip of chain and take off chain

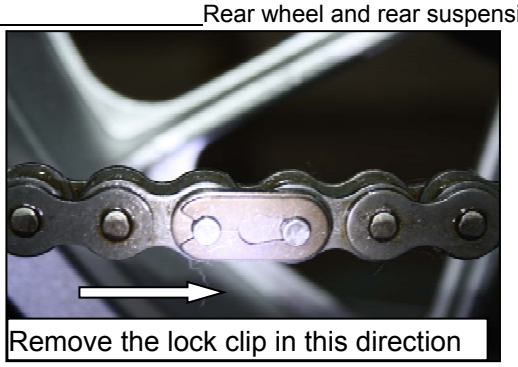


7) Take out the rear wheel assembly and the spindle bush.

**Installation of rear wheel**

Installation is in the reverse order of removal.

While mounting the rear wheel, make sure the spindle bushes on both sides are aligned and the brake caliper clamps the rear wheel hub. While installing, properly adjust the chain adjuster to ensure that the chain slack is between 15mm and 25mm and that the left and right scale lines of the chain adjuster are consistent, and then fasten the rear wheel spindle nut to the required tightening torque of 50-60N.m

**Warning**

***The rear wheel spindle must be firmly screwed up to the required torque of 50-60N.m***

## Rear wheel spindle inspection

Dismantle front wheel axle nut and take out rear wheel axle to check it whether is distorted.

Place the rear wheel spindle on the V-holder, and measure the deflection of the wheel spindle with a dial gauge; if the reading is no less than 0.2mm, replace the rear wheel spindle.

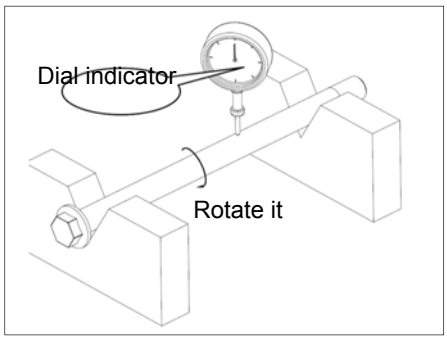


## Rear wheel bearing inspection

Check rear wheel axle bearing whether is worn or damaged and take out bearing.

Place the rear wheel on the calibration table, inspect the rim's deflection, and then manually rotate the wheel and measure its deflection value with a dial gauge; if the reading is no less than 2mm, replace the wheel bearing

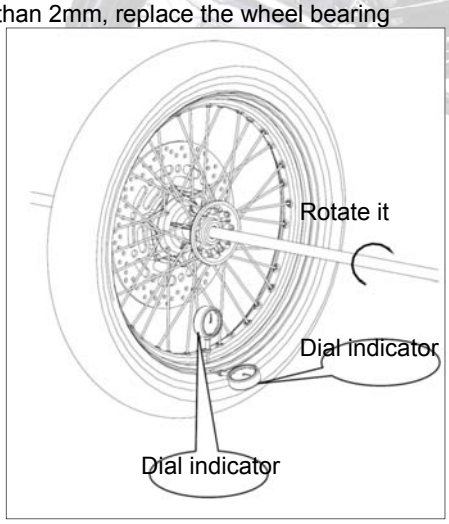


## Maintenance of Rear Transmission

**Disassemble, assemble and check rear drive device**

1) Dismantle bolt of gear shift lever to check gear shift lever and gear shift shaft whether are damaged.

2) Dismantle left rear cover to check bolt and bolt hole whether are damaged.

3) Dismantle chain case to check bolt and nut whether are damaged.

4) Dismantle small sprocket bolt to check bolt whether is damaged.

Check the tooth form of the rear sprocket, and replace it in case of serious damage. While replacing, directly remove the nut; and apply the thread retaining adhesive LOCTITE243 on the rear sprocket retaining screw, with the tightening torque being 20-30N

Take out bush and dismantle bolt of rear driven chain disc.

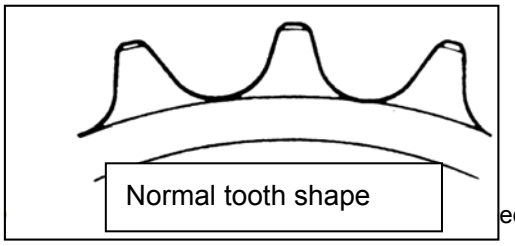


ed limit value.

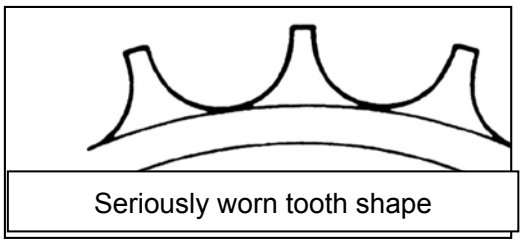


Check chain abrasion and deformation.

Check chain joint pin whether is loose or worn and clip whether is deformed

Check chain abrasion and deformation.

Check chain joint pin whether is loose or worn and clip whether is deformed.

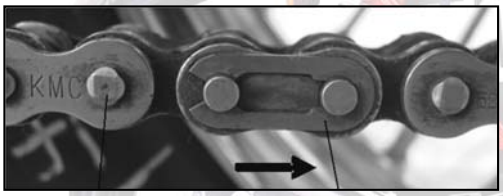


## Rear fork

**To remove the rear fork:**

1、Remove the rear wheel assembly first (See “Removal of rear wheels”).

2、Unscrew the rear fork shaft nuts and pull out the rear fork shaft from the left

3、Remove the rear shock absorber and rear fork connecting bolt.

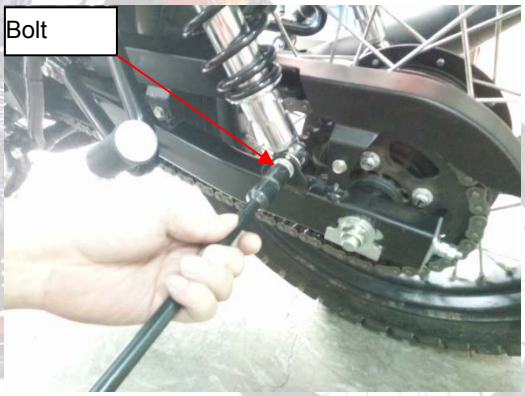


4、Take out the rear fork backwards.

**To install the rear fork:**

Installation is in the reverse order of removal..

While installing the rear fork shaft, make sure that the end covers shall be aligned and that the tightening torque of the rear fork shaft retaining nut is 50-60N.m,

**Warning:**

***The rear fork retaining nut must be firmly screwed up to the required torque of 50-60N.m.***

**Rear fork shaft inspection**

Place the rear fork shaft on the V-holder, and measure the deflection of the rear fork shaft with a dial gauge; if the reading is no less than 0.2mm,

Replace the rear fork shaft.

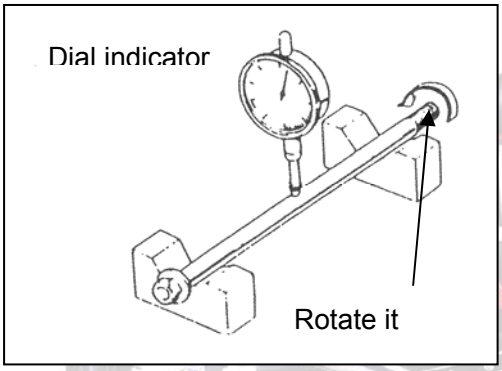


**Rear fork bearing inspection**

Replace the removed seal ring and needle bearing with new ones. After installation, ensure the needle bearing is 3mm away from the end face and apply lithium base grease on the needle bearing. After the installation is complete, check whether the needle bearing can rotate flexibly.

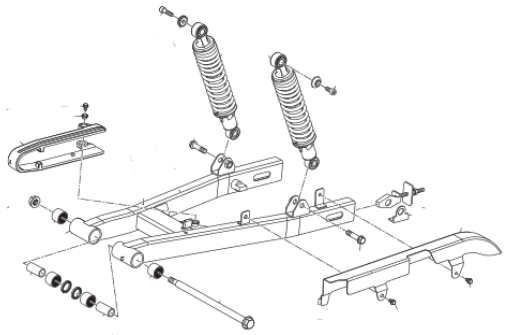

## Disassemble, assemble and check rear absorber

Remove the bolt connecting the frame

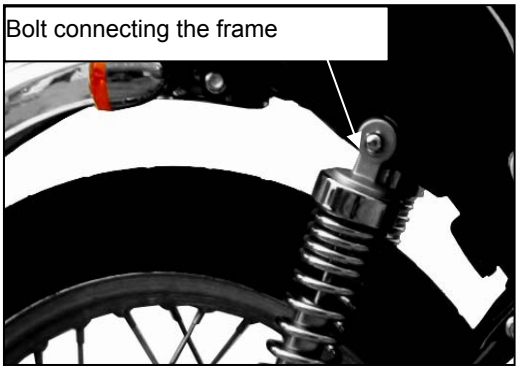


Remove the bolt connecting the rear fork.

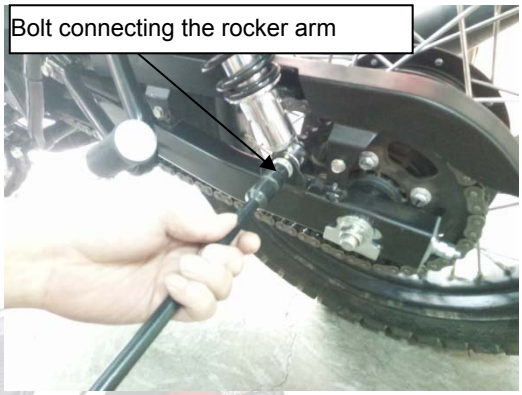


**Rear shock absorber spring preload adjustment**

The rear shock absorber (1) spring preload can adjusted; to make the adjustment, operate as follows:

- Using an appropriate spanner, turn the ring nut (2) positioning the adjuster (3) in correspondence to the catch (4).

- For a softer adjustment, move the adjuster (3) towards position “1” and for a harder adjustment move it towards position “5”.

Standard adjustment is in position “2”.

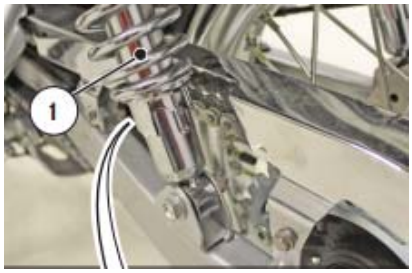

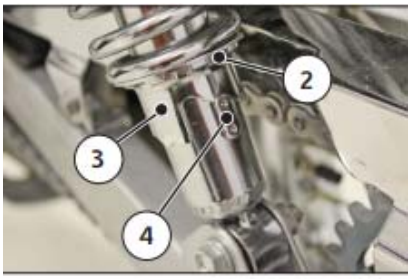


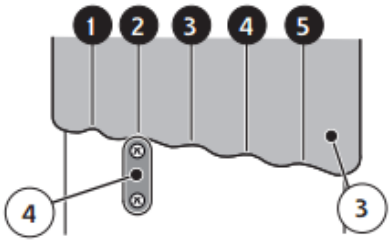


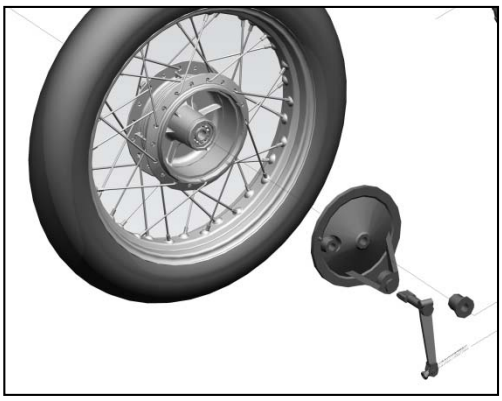

Brake shoe block in working state, the cylindrical Φ160

Remove the fixed shoe circlip, remove the shoe

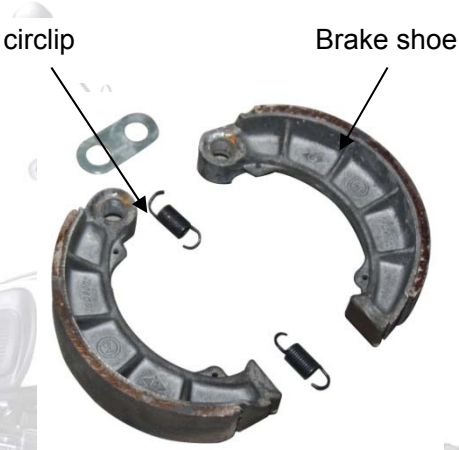


**To install the rear damper:**

Installation is in the reverse order of removal. While installing, use the upper hole for the lower installation of the damper.

⚠ **Notice:**

***Before removing the damper, the tightening torque of the bolt connecting the frame is 30-40N.m, and the tightening torque of the bolt connecting the rear fork is 30-40N.m***

## Rear Brake

Pulling the front & rear brake, checking the wear and tear of the brake shoe. If the mark "△" on the drum brake cover and also on the brake cam alignment, shows the brake shoe has been touched the wear limit. Please change it.

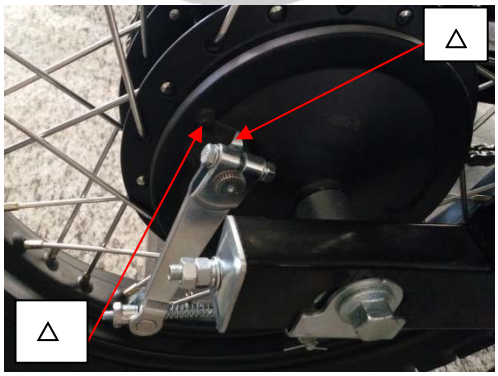


Disconnect the rear wheel

Remove the brake on the rear wheels

# 13. General remarks of electrical system

| | |
|---|---|
| Precautions for circuit inspection | System principle and composition |

## Precautions for circuit inspection

1) While disengaging or engaging the patch plug, turn the ignition switch to OFF position, otherwise the electrical elements may be damaged.
2) While checking the circuit, use a stylus that can be inserted from the front and rear ends of the connector and can contact the terminals reliably.
3) To carry out the line on/off inspection, turn off the power supply and the related electrical elements.
4) To carry out inspection with voltage, check the accumulator voltage first.
5) In case of electrical system failure, diagnose according to the following steps:
   A. Observe the failed behavior to determine which sub-system fails.
   B. According to the circuit schematic drawing, use the process of elimination (POE) to narrow down the possible failure scope.
   C. Check the sub-system line for open circuit, short circuit or wrong connection.
   D. Check the related components for failure or damage.

1) While looking up the line failures, check where the removal is convenient first following the principle of “searching from easy to difficulty”. Both the parameter detection method and the parts replacement method are acceptable. However, if the parts replacement method is used, you should confirm whether or not overload has occurred in the line, as this may damage the new spare parts.
2) A multicenter must be permanently available for the circuit inspection.
3) Most of the instant electrical failures are caused by cable connector or electric wire failure.

## System principle and composition

The electrical system is an important guaranty for the motorcycle’s running, safety running, reliable running and efficient running. It involves many aspects, including contents of several subjects, including electric machine, electrical, electronics, computer, electrochemistry, acoustics, optical material, etc. The development of electronics will especially influence the motorcycle’s electrical system significantly. XY400-2AA’s electrical system uses a lot of advanced vehicle electronics technologies that are much more complicated then the traditional motorcycle. It comprises the following sub-systems:

- Power supply system
- Starting system
- Engine management system
- Illumination signal system

- Information display system

We shall give detailed explanations separately in the following sections

# 14. Power supply system

| | |
|---|---|
| Overview | Major parts and components |
| Circuit schematic drawing | Major faults diagnosis |
| Maintenance of Charging System | |

## Overview

Power supply system is the precondition for a complete vehicle to operate, capable of providing sufficient electric energy for other electrical systems. The main contents include recharging, charge storing and discharging. XY400-2A power supply features large power supply capacity as high as more than 250W. It comprises the following parts and components:

- Magneto
- Variable voltage rectifier
- Accumulator
- Combined ignition switch
- Various fuses

## Circuit schematic drawing

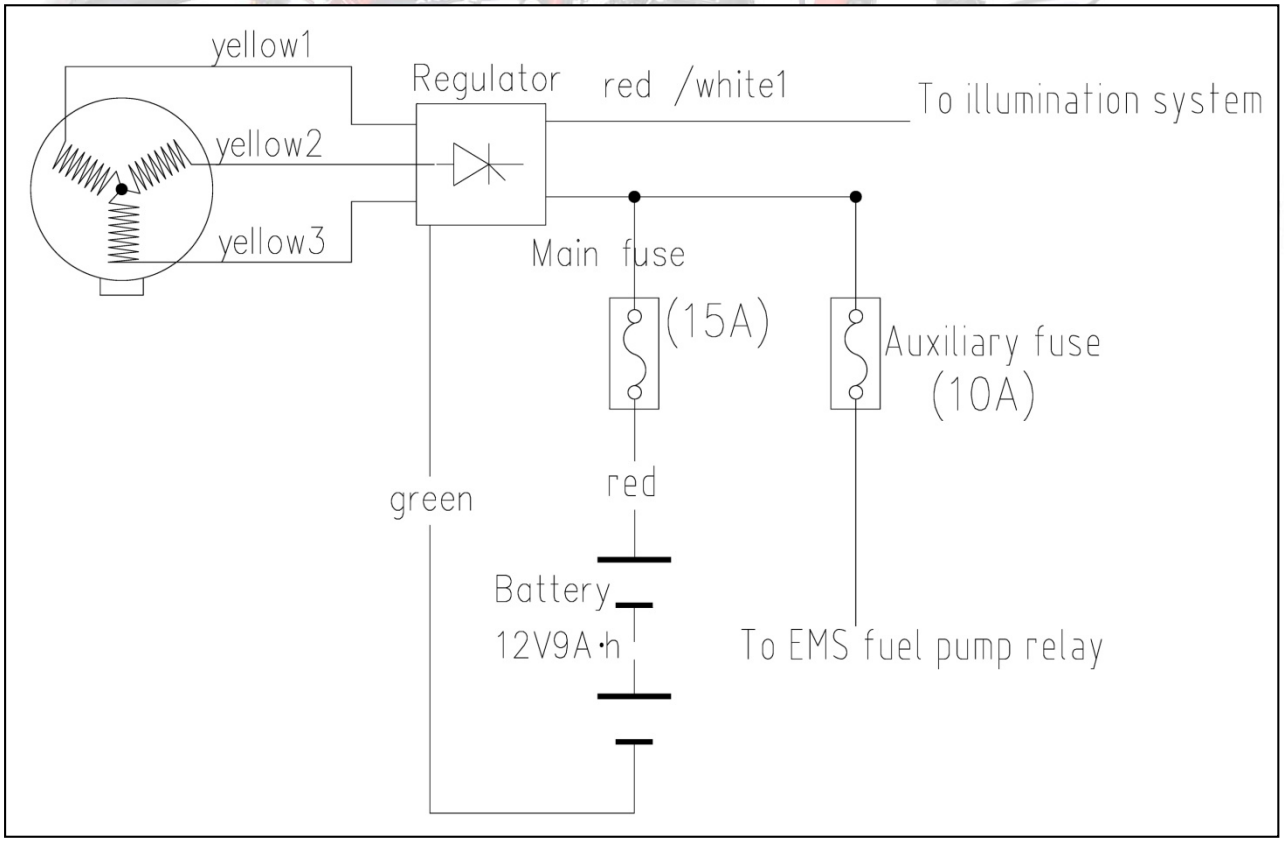

## Maintenance of Charging System

**Disassemble. assemble and check charging system**

1. Check socket whether contact well.

2. Dismantle rectifier bolt and measure two yellow wire whether is short circuit or broken circuit by millimeter.

3. Open left cover to check magneto coil whether is burned or loose.

4. Dismantle magneto bolt and replace magneto coil.

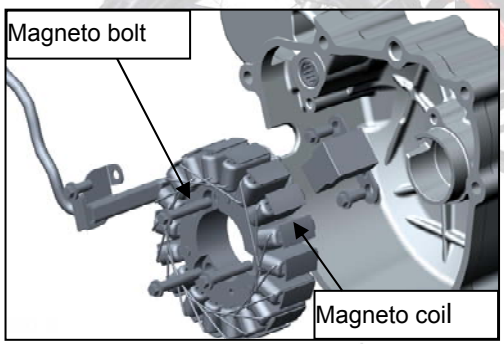


5. Dismantle starting clutch and replace magnetic case.

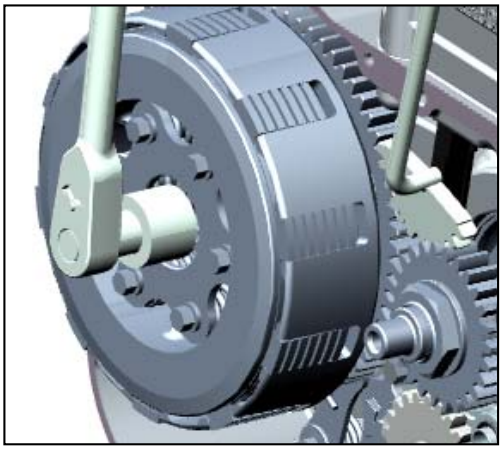

6. Check plate electrode whether is damaged

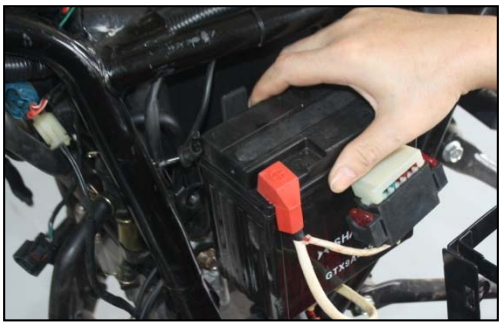

7. check connector socket of rectifier and measure output voltage by multimeter to (13.0-13.3)v

8. Check fuse pipe whether is damaged.

## Major faults diagnosis

| Phenomenon | Possible causes | Solutions |
|---|---|---|
| ● No electricity in the complete vehicle:<br>● Replace main fuse;<br>● While turning on with the key, the meter has no display, and other electrical functions do not work. | ● Main fuse is blown;<br>● Main fuse circuits contact poorly;<br>● Accumulator's positive and negative poles contact poorly;<br>● No electricity in accumulator;<br>● Ignition switch failed;<br>● Ignition switch outgoing line and the main cable poorly plugged;<br>● The main cable related circuit open circuit or short circuit | ● Replace main fuse<br>● Re-plug.<br>● Reconnect;<br>● Recharge or replace;<br>● Repair or replace;<br>● Re-plug.<br>● Repair or replace; |
| ● Low accumulator voltage:<br>● While powering on, the meter's voltage alarm lamp blinks; or the accumulator's terminal voltage is less then 12V. | ● The vehicle has been stored for too long, and the accumulator has discharged automatically;<br>● Charging circuit fails in the complete vehicle.<br>● Accumulator fails to store charge. | ● Recharge it with DC voltage stabilizing charger;<br>● Check the charging circuit.<br>● Replace accumulator. |
| ● Accumulator charges insufficiently;<br>● After the engine is started, the meter's voltage alarm lamp blinks; or the accumulator's terminal voltage is less then 13V. | ● Variable voltage rectifier's outgoing line is poorly contacted or plugged with the main cable or magneto;<br>● Related lines of the main cable are open or shorted.<br>● Magneto fails;<br>● Variable voltage rectifier fails;<br>● Accumulator fails to store charge. | ● Re-plug<br>● Repair or replace;<br>● Replace the magneto;<br>● Replace the variable voltage rectifier;<br>● Replace accumulator. |
| ● Accumulator overcharged;<br>● Large amount of air bubbles burst out from the accumulator. | ● Variable voltage rectifier fails. | ● Replace it. |

# 15. Starting system

## Overview

| | |
|---|---|
| Overview | Major parts and components |
| Circuit schematic drawing | Major faults diagnosis |
| Maintenance of starting system | |

When the engine starts to work, an exogenous action is needed to help it run, thus entering the ignition & fuel supply procedure to enable the internal combustion engine to combust repeatedly and work steadily. XY400-2A motorcycle is only equipped with electric controlled starting. First, release it from the protection of shift position switch, side stand switch and clutch switch; then press down the start button to power on the relay, start the engine to drive the idle gear and starter gear, thus enabling the engine to enter its operating cycle for normal ignition, fuel injection and combustion. The system consists of the following components:

- Starting motor;
- Starting relay;
- Accumulator;
- Start switch and flameout switch;
- Neutral position switch and clutch switch.

## Circuit schematic drawing

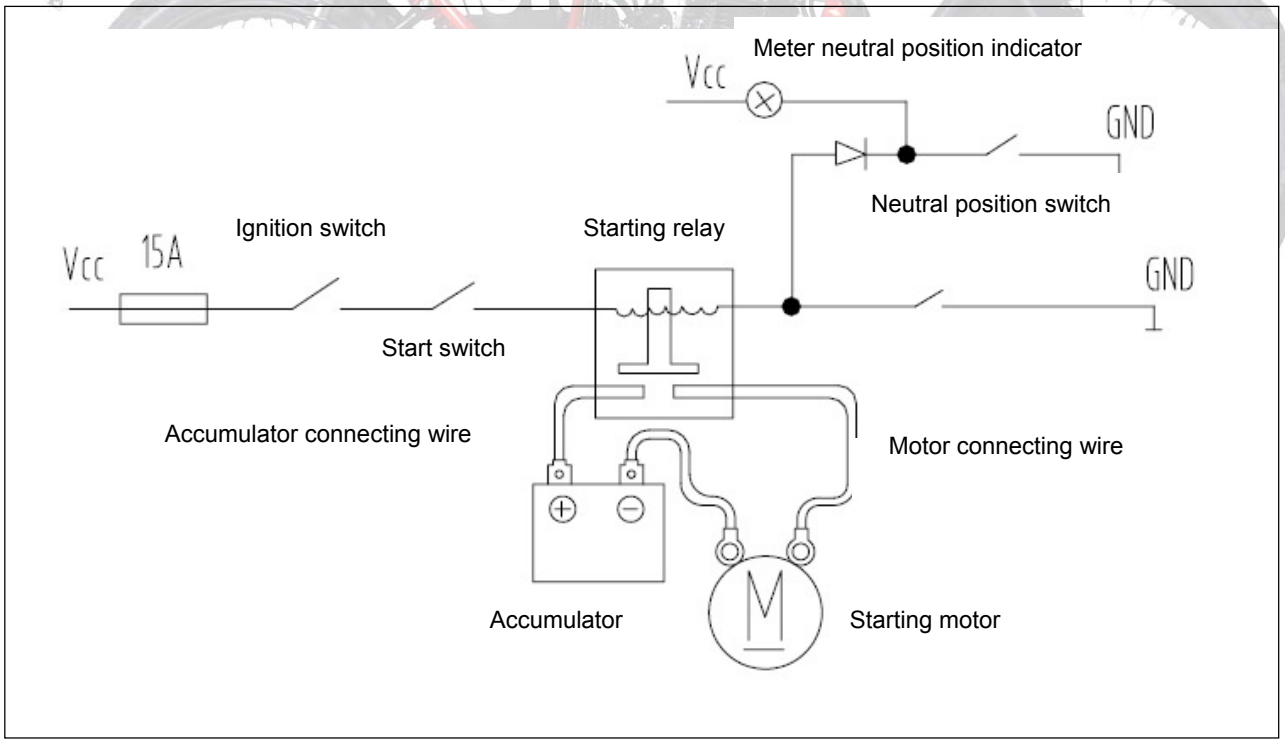

## Maintenance of starting system

**Disassemble, assemble and maintain**

1. Turn on ignition switch and flameout switch to check electrical start whether energize.

2. Check plate electrode whether is damaged

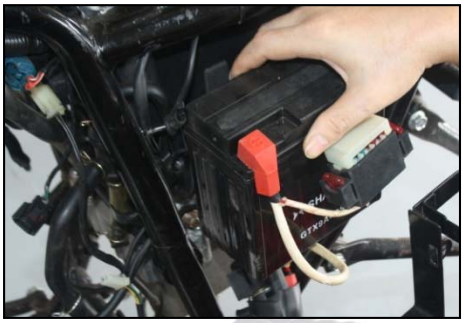

3. Check charging coil of magneto whether is charged.

4. Check rectifier whether is charged.

5. Check fuse whether is burned.

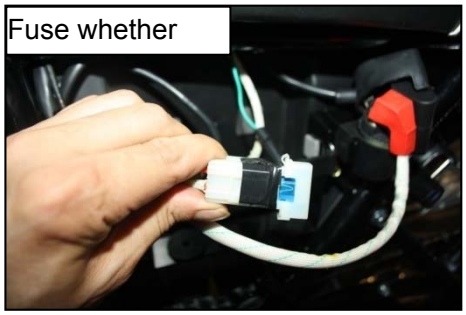


6. Check positive and negative pole of battery whether

7. Check relay whether is damaged

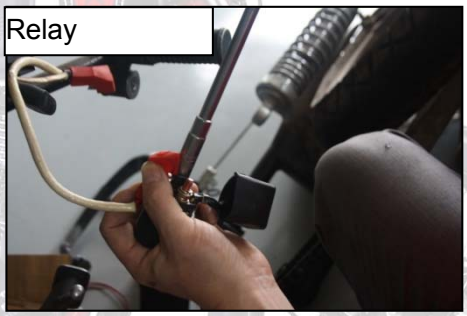


8. Check magneto coil whether contact well.

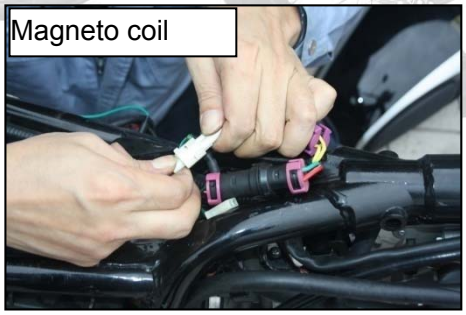


9. Check electrical starting switch whether contact well.

10. Turn on electrical starting button to check whether is

    rusted or energize.

11. Turn on flameout switch to check it whether is rusted or

12. Check switch plug of relay whether is loose.

13. Check clutch electrical starting switch plug whether is

    damaged or loose.

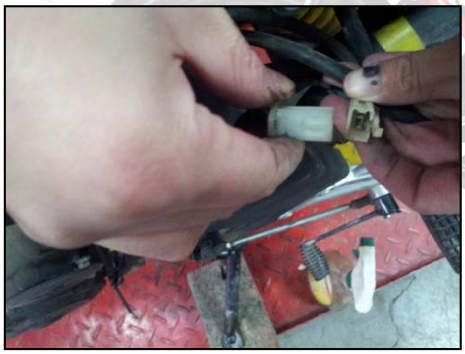

## Major faults diagnosis

| Phenomenon | Possible causes | Solutions |
|---|---|---|
| ● Starting relay doesn't attract;<br>● No sound of relay suction can be heard while pressing the start button, and the starting motor doesn't run. | ● Accumulator voltage too low;<br>● Corresponding fuse is not connected or is blown;<br>● The Neutral line of the shift position switch is open circuit<br>● Clutch switch open circuit failure;<br>● Start button open failure;<br>● Flameout switch open circuit failure;<br>● Starting relay failed;<br>● Related lines of the main cable are open. | ● Recharge the accumulator;<br>● Connect the fuse or replace it;<br>● Connect the line or replace shift position switch<br>● Connect the line or replace clutch switch<br>● Connect the line or replace the left switch;<br>● Connect the line or replace the left switch<br>● Replace the starting relay;<br>● Repair or replace main cable. |
| ● Starting motor doesn't rotate: there is the sound of relay suction, however, the motor doesn't rotate. | ● Accumulator voltage too low;<br>● Heavy line connector lug slackened;<br>● Motor open circuit failure;<br>● Open circuit between the terminal contacts of the starting relay;<br>● Motor short circuit failure;<br>● Engine clogged, motor rotation jammed. | ● Recharge the accumulator<br>● Fasten the connector lug;<br>● Replace the motor<br>● Replace the starting relay<br>● Replace the motor;<br>● Check the engine. |
| ● Motor rotating speed too low | ● Accumulator voltage or capacity too low;<br>● Connector lug contacts poorly;<br>● Starting motor's output torque is insufficient;<br>● Motor resistance too large. | ● Recharge or replace accumulator;<br>● Fasten the connector lug;<br>● Replace the motor;<br>● Check the engine. |

# 16. Illumination signal system

| | |
|---|---|
| Overview | Major parts and components |
| Circuit schematic drawing | Major faults diagnosis |

## Overview

Illumination signal system is an important guaranty for the safe driving of the vehicle. It includes the headlamp illumination system, signal lamp control system and horn system.

Headlamp illumination system:

We need to use the headlamp to illuminate the road surface and inform the surrounding vehicles or people of its presence while driving at night; use the high-beam while driving at intermediate or high speed, and use the low-beam while meeting other vehicles; the low-beam shall be anti-dazzled

Signal lamp control systems:

In a turning drive, the vehicle shall prompt the surrounding vehicles and people to dodge by the flash of the turn lamp; while driving at night, it shall inform of its presence by the tail lamp's front / rear position lamp, and illuminate the number on the license plate; while braking, it shall illuminate the brake lamp to inform the vehicle behind of its braking deceleration. The flash of the turn lamp is controlled by a switch and a flasher, and the illuminations of other lamps are controlled only by a switch.

Horn system:

When there are other surrounding vehicles or pedestrians are or will likely hinder your driving, use horn to alert them for safe driving. The operation of the horn is controlled by the horn button.

Constituting parts and components:

- Head lamp
- Combined rear position lamp
- Horn
- Front brake lamp switch
- Rear brake lamp switch
- Left / Right combination switch

## Circuit schematic drawing

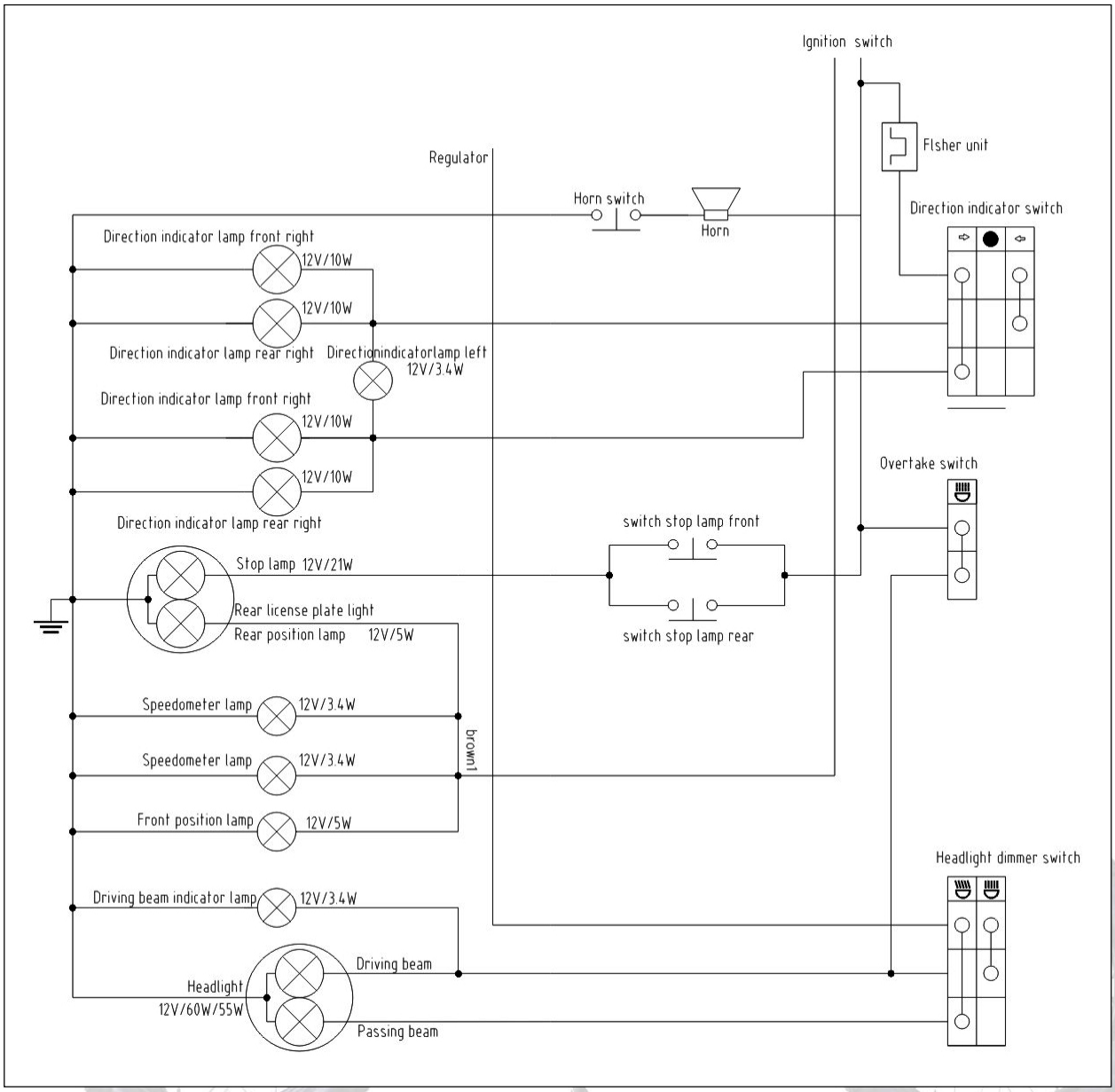

## Maintenance of illumination system

1. Turn on ignition switch and flameout switch to check electrical start whether energize.

2. Open battery to check electrode plate whether is burned or electrolyte is little.

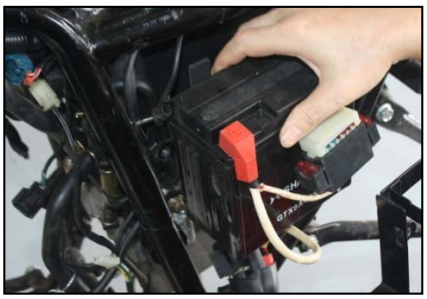

3. Check charging coil of magneto whether is charged.

4. Check rectifier whether is charged.

5. Check fuse whether is burned.

6. Take off headlamp switch socket to check whether there is current

## Head lamp

1. Dismantle headlamp bolt to check lamp case whether is damaged.

2. Take out headlamp bulb to check it whether is burned
3. Mount bulb and holder to check headlamp whether it light

4. Take off remote, near lamp of headlamp and overtake lamp wire to check whether there are current or is loose.

5. Check headlamp ground wire whether is loose.

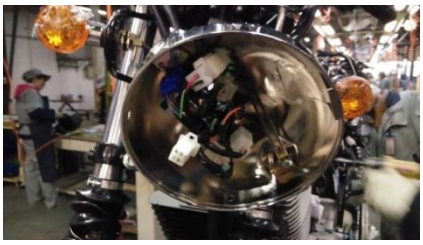

## Tail lights

1. Dismantle taillight bolt to check lamp case whether is damaged.

2. Check tail lamp and brake lamp socket whether lose

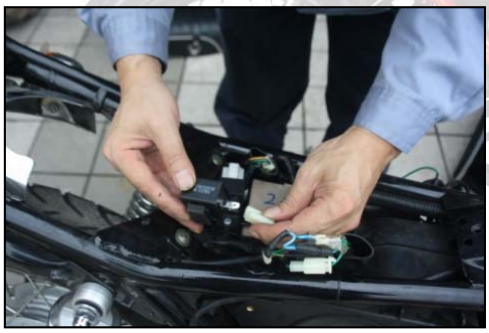

## Signal lamp control systems

Check flasher whether is burned or plug is loose.

Turn on signal indication switch left handle to check switch

Check steering signal indication lamp socket whether lose contact or bulb is burned

3. Take off ignition switch socket to check whether current

## Brake lamp switch

Dismantle after brake lamp switch to check it whether lose

Dismantle brake switch before to check it whether lose contact.

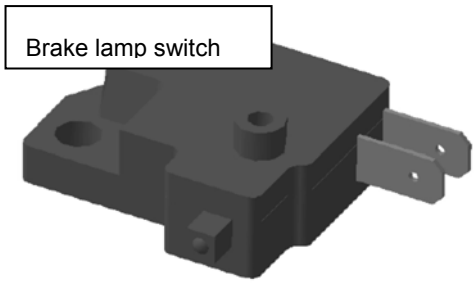


## Horn

Check horn button whether is rusted or lose contact

Adjust velum of electrical horn to check it whether is damaged.

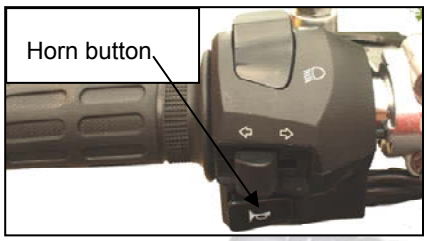


Check neutral socket whether contact well.

## Fuel level sensor

Check fuel sensor failed or float is blocked;

Line poorly plugged, open or short circuit.

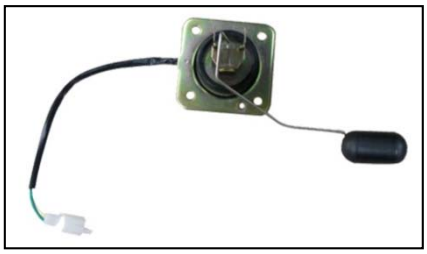

## Major parts and components

Head lamp

Combined rear position lamp

Horn

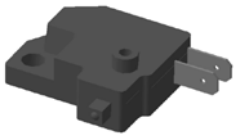

Front brake lamp switch

Rear brake lamp switch

Left handle switch

Right combination switch

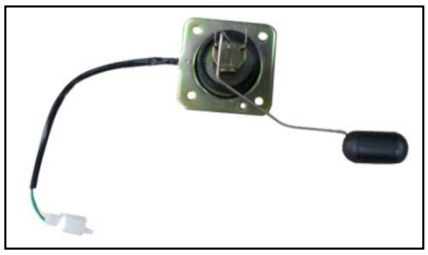

Fuel level sensor

## Major faults diagnosis

| Phenomenon | Possible causes | Solutions |
|---|---|---|
| ● Headlamp does not illuminate;<br>● Hi-beam does not illuminate<br>● Low-beam does not illuminate<br>● Both do not illuminate | ● Accumulator voltage too low;<br>● Corresponding fuse is not connected or is blown;<br>● Corresponding switch failed;<br>● Bulb failure;<br>● Poor plugging of line;<br>● Related lines of the main cable are open | ● Recharge the accumulator;<br>● Connect the fuse or replace it;<br>● Repair or replace switch;<br>● Replace bulb;<br>● Re-plug;<br>● Repair or replace main cable. |
| ● Headlamp fails to illuminate reliably | ● Poor contacting in fuse, bulb or lines; | ● Reconnect the poorly contacted parts; |
| ● Headlamp illumination small | ● Accumulator voltage too low;<br>● Line contact voltage drop too large;<br>● Headlamp body failed | ● Recharge the accumulator;<br>● Repair the line;<br>● Replace headlamp |
| ● Position lamp doesn't illuminate:<br>● Front position lamp doesn't illuminate:<br>● Sidecar front / rear position lamp<br>● Tail lamp doesn't illuminate;<br>● Both do not illuminate | ● Corresponding fuse is not connected or is blown;<br>● Position lamp switch failed;<br>● Bulb failure;<br>● Poor contact in lines;<br>● Related lines of the main cable are open | ● Connect the fuse or replace it;<br>● Repair or replace the left switch;<br>● Replace bulb;<br>● Re-plug;<br>● Repair or replace main cable. |
| ● Brake lamp does not illuminate | ● Corresponding fuse is not connected or is blown;<br>● Front brake lamp switch failed;<br>● Rear brake lamp switch failed;<br>● Bulb failure; | ● Connect the fuse or replace it;<br>● Replace front brake lamp switch';<br>● Adjust and replace rear brake lamp switch;<br>● Replace bulb<br>● Inspection / Repair |

| | | |
|---|---|---|
| | ● Line failure | |
| ● Horn does not sound | ● Corresponding fuse is not connected or is blown;<br>● Horn button failed;<br>● Horn failed;<br>● Poor contact in lines;<br>● Related lines of the main cable are open. | ● Connect the fuse or replace it;<br>● Repair or replace the left switch;<br>● Adjust or replace horn;<br>● Re-plug;<br>● Repair or replace main cable. |
| ● Turn signal lamp does not illuminate;<br>● Front turn lamp does not illuminate;<br>● Rear turn lamp does not illuminate;<br>● Both do not illuminate | ● Accumulator voltage too low;<br>● Corresponding fuse is not connected or is blown;<br>● Left turn lamp switch failed;<br>● Right turn lamp switch failed;<br>● Flasher failed;<br>● Bulb failure;<br>● Poor contact in lines;<br>● Related lines of the main cable are open. | ● Recharge the accumulator;<br>● Connect the fuse or replace it;<br>● Repair or replace the left switch;<br>● Repair or replace the left switch;<br>● Replace flasher;<br>● Replace bulb;<br>● Re-plug;<br>● Repair or replace main cable. |

# 17. Electrical starting control system

| | |
|---|---|
| Overview | Major parts and components |
| Circuit schematic drawing | Major faults diagnosis |

## Overview

The information display system displays the dynamic and static information of the complete vehicle on the instrument panel for the driver's safe operation.

The complete vehicle information the XY400-2A displays include: vehicle speed, engine speed, fuel indicator, Neutral indicator, turn indication, high-beam indication, total / subtotal mileage traveled and EFI Indicator.

Constituting parts and components include:

- Combination meter
- Turn lamp
- Vehicle speed sensor
- Fuel level sensor
- Shift position switch
- Signal switch
- ECU

## Circuit schematic drawing

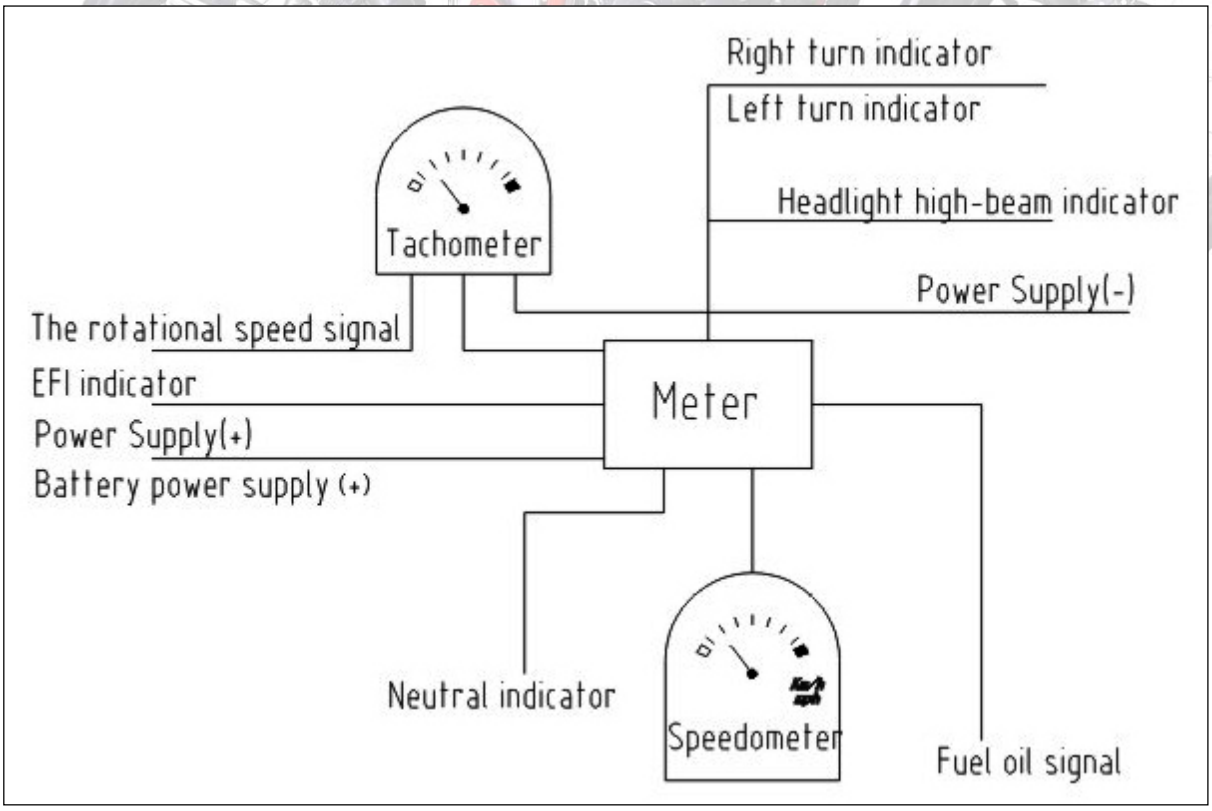

# Major parts and components

## ○Combination meter

### 1. Outline drawing

### 2. Line color function corresponding table

| S/N | COLOUR | FUNCTION | S/N | COLOUR | FUNCTION |
|---|---|---|---|---|---|
| 1 | Black | Power Supply(+) | 8 | Black/ Yellow | The rotational speed signal |
| 2 | green | Power Supply(-) | 9 | Yellow / white | Fuel oil signal |
| 3 | Brown | Instrument lighting | 10 | Red | Battery power supply（+） |
| 4 | Blue | High-beam light | 11 | Green / Blue | EFI indicator |
| 5 | Light blue | Right turn indicator | 12 | Yellow | Speed sensor signals |
| 6 | Orange | Left turn indicator | 13 | Red/ white | ABS signal |
| 7 | Shallow green /red | Neutral warning light | | | |

## 3. Meter reading and usage

### 1) Speedometer

Indicate motorcycle speed (Km/h). Do not exceed legal rate-limiting to assure safe riding.

### 2) Turning indicator light

⇨（R）right turn，twinkle when turn to right(Green).

⇦ （L）left turn，twinkle when turn to left(Green).

### 3) High-beam light

The light comes on when activating the high-beam light using the control on the left-hand switch.

### 4) Neutral warning light .

The light comes on when the gear shift lever is in neutral position (no gear engaged).

### 5) Engine failure warning light

When the ignition key is turned, the engine control unit runs a self-test, the light comes on for a few seconds and then goes off if no fault is found.

If the light comes on while the engine is running, it means that there is an engine or injection system failure.

- Stop and turn off the engine
- Wait a few minutes and restart the engine; if the light comes on again, contact your nearest SWM dealer to have the self-test system checked

### 6) Fuel reserve warning ligh

When the ignition key is turned, the light comes on for a few seconds and then goes off.

If the light comes on while riding the motorcycle, it means that the fuel has gone into reserve ( 3 litres) and you need to refuel as soon as possible

### 7) Odometer

Indicate riding distance (Km).

### 8) Tachometer

It shows the speed(rpm) of the engine.

### 9) Trip meter

It shows the mileage of trip in kilometers.

### 10) Trip meter knob

Indicate distance from Zero, by rotating Zero Knob to the Direction of Arrow can return it to Zero

### 11) ABS Lamp

When the ignition key is turned, the ABS unit runs a self-test, the light comes on for a few seconds and then goes off if no fault is found.

If the light comes on while the engine is running, it means that there is ABS system failure.

**Maintenance of electrical starting control system**

1. Turn on ignition switch and flameout switch to check electrical start whether energize.

2. Check fuse whether is burned.

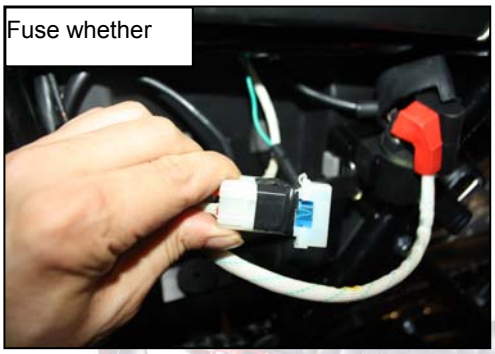


3. Dismantle headlamp holder to check holder whether there is current.

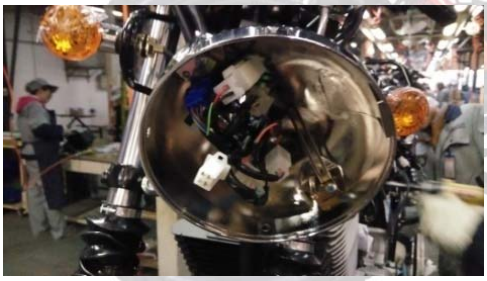

4. Dismantle meter bolt to check it whether is loose or damaged.

5. Dismantle meter bolt and odometer cable to check bolt whether is damaged or loose.

6. Take off meter to check odometer, tachometer and fuel meter whether are damaged.

## Major faults diagnosis

| Phenomenon | Possible causes | Solutions |
|---|---|---|
| ● Winker indicator is out of work<br>● Meter dial illuminator is out of work<br>● Speedometer is out of work<br>● Tachometer of generator is out of work | ● The winker indicator filament is burnt out<br>● The meter dial illuminator filament is burnt out<br>● The speedometer is damaged.<br>● Tachometer of generator is damaged. | ● Replace winker indicator bulb<br>● Replace meter dial illuminator bul<br>● Replace speed meter<br>● Replace tachometer |
| ● There is no mileage increasing indication upon vehicle speed | ● Meter failed | ● Replace meter |
| ● Speedometer is out of work | ● Soft shaft is broken | ● Replace speedometer soft shaft assembly |
| ● Engine speed indication failure | ● Line poorly plugged or open circuit;<br>● Meter failed;<br>● ECU failed; | ● Re-plug or repair;<br>● Replace meter;<br>● Replace ECU |
| ● Fuel level indication failure:<br>● No indication while there is fuel;<br>● Having indication while there is no fuel, | ● Fuel sensor failed or float is blocked;<br>● Meter failed;<br>● Line poorly plugged, open or short circuit. | ● Replace fuel sender;<br>● Replace meter;<br>● Re-plug or repair. |
| ● Meter backlight source doesn't illuminate | ● Line poorly plugged or open circuit;<br>● Meter failed | ● Re-plug or repair;<br>● Replace meter; |
| ● Meter can't communicate with ECU; | ● Line poorly plugged or open circuit;<br>● Meter failed;<br>● ECU failed; | ● Re-plug or repair;<br>● Replace meter.<br>● Replace ECU |

| | | |
|---|---|---|
| ● Turn indicator filament is burnt out<br>● Headlight high-beam indicator filament is burnt out | ● Line poorly plugged or open circuit;<br>● Meter failed; | ● Re-plug or repair;<br>● Replace meter; |
| ● LCD fails to switch mode | ● Meter failed | ● Replace meter |
| ● Soft shaft is broken. | ● | ● Replace speedometer soft shaft assembly |

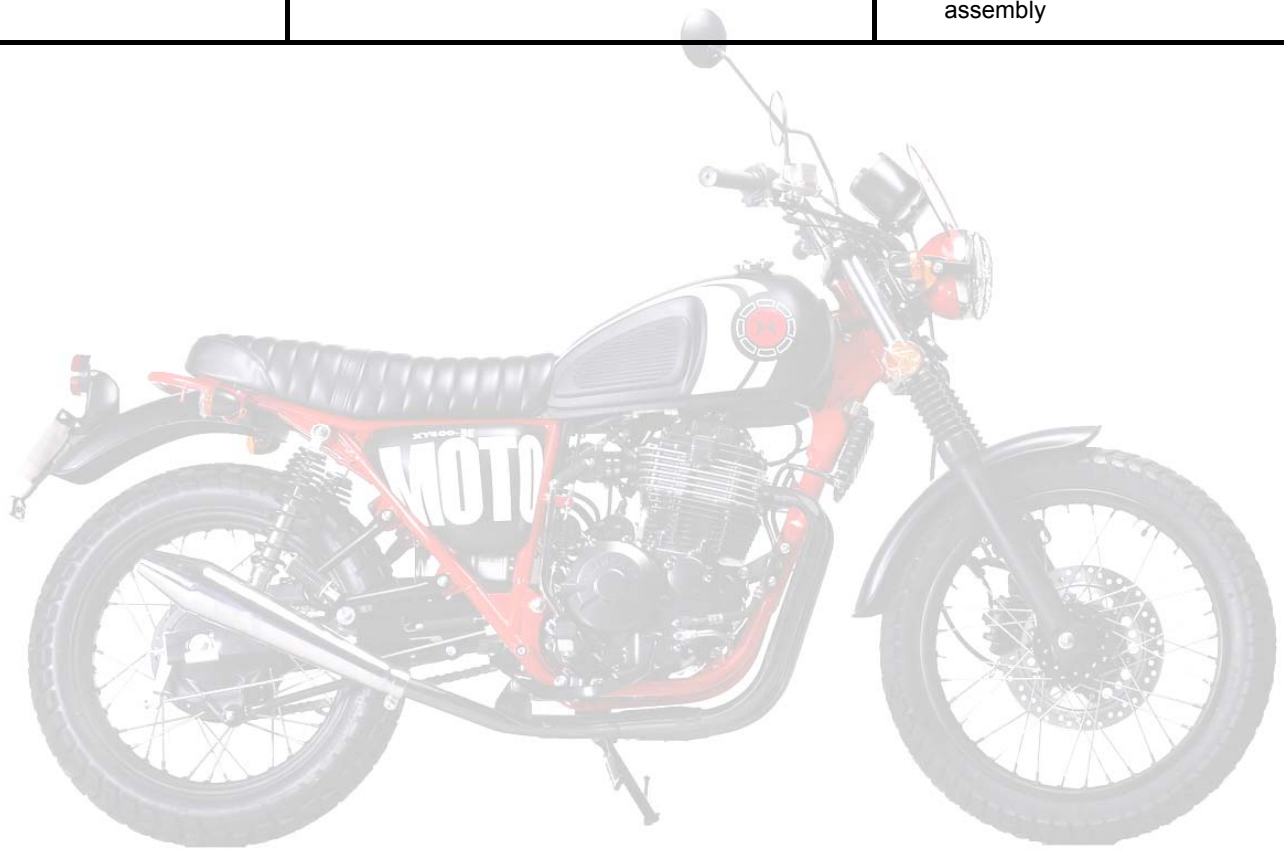

# 18. Engine management system

## System Overview

| | |
|---|---|
| System Overview | Tools |
| Major parts and components | Maintenance depending on the malfcode |
| Circuit schematic drawing | DTC List |
| Maintenance of Engine management system | Maintenance depending on the performance |

**Components of system and Operating principle**

The Engine Management System(EMS) comprises electronic control unit(ECU), throttle body, Idle speed control valve, fuel pump, fuel injector, ignition coil, O2 sensor, throttle position sensor, T-MAP sensor, cylinder head temperature sensor and so on. Based on the air flow and engine speed, the fuel injector and ignition coil are controlled by ECU to get the optimal combustible mixture of fuel and air and Ignition timing which meet all engine operating conditions. The EMS use sensors to collect parameters such as air flow, temperature of inlet air, cylinder head temperature, atmospheric pressure and the operation state of engine (rpm, load, acceleration and deceleration). All parameters are transferred to the ECU with electronic signal. The ECU output controlling signals after input signal are handled. Through the engine and actuators on the vehicle (ignition coil, fuel injector, Idle speed control valve and so on), the fuel and fire are exactly controlled and corrected with closed loop. For production conformity, corrected fuelling in order to match up to the difference of vehicles due to the inconformity of components.

**System composition:**

1. Sensor:

- Intake air pressure sensor (load information) intake air temperature and pressure sensors
- Throttle position sensor (load information, load range information, acceleration/deceleration information)
- Engine speed sensor (speed information, crankshaft position)
- Intake air temperature sensor (air density information)
- Oxygen sensor (information of the excess air coefficient is more than 1 or less than 1)

2. Actuator:

- Fuel pump relay,
- Fuel pump
- Fuel injector (fuel supply)
- Ignition coil
- High-tension cord
- Spark plug (ignition)

- Throttle, Idle speed control valve (air intake)

3. Electronic control unit

- ECU

## Major parts and components

Electronic control unit( ECU)

Oxygen sensor

Ignition Coil

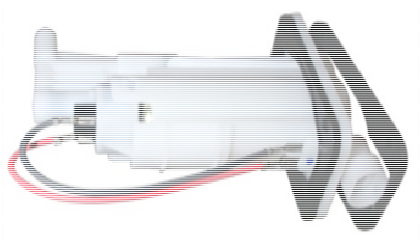

Fuel pump assy

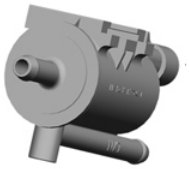

Solenoid valve

## Circuit schematic drawing

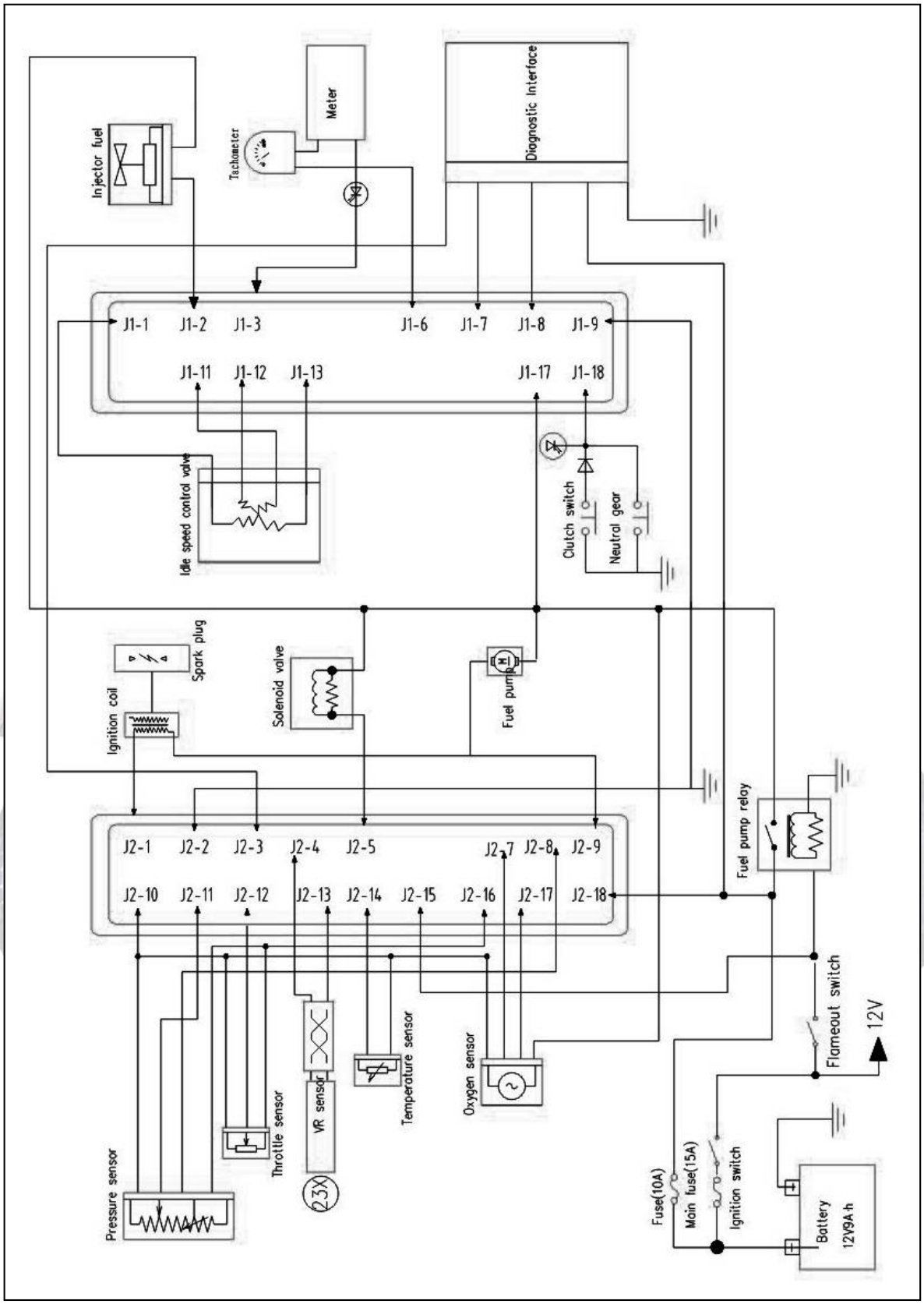

| ITEM | PIN No. | DESCRIBE | ITEM | PIN No. | DESCRIBE |
|---|---|---|---|---|---|
| 1 | J1-1 | IACAHi | 1 | J2-1 | COILA |
| 2 | J1-2 | MAGNETO CUT RELAY | 2 | J2-2 | GND |
| 3 | J1-3 | MIL | 3 | J2-3 | KW2000 |
| 4 | J1-4 | | 4 | J2-4 | CRANK HI |
| 5 | J1-5 | | 5 | J2-5 | INJA |
| 6 | J1-6 | TACH | 6 | J2-6 | |
| 7 | J1-7 | CANLo | 7 | J2-7 | O2AHTR |
| 8 | J1-8 | CANHi | 8 | J2-8 | IAT_MAT |
| 9 | J1-9 | GND | 9 | J2-9 | FUEL PUMP RELAY |
| 10 | J1-10 | | 10 | J2-10 | 5VRTN |
| 11 | J1-11 | IACALo | 11 | J2-11 | MAP |
| 12 | J1-12 | IACBHi | 12 | J2-12 | TPS |
| 13 | J1-13 | IACBLo | 13 | J2-13 | CRANK LO |
| 14 | J1-14 | | 14 | J2-14 | CLT |
| 15 | J1-15 | | 15 | J2-15 | IGN |
| 16 | J1-16 | DIAG | 16 | J2-16 | 5VREF |
| 17 | J1-17 | FUEL PUMP RECIRCULATION | 17 | J2-17 | O2A |
| 18 | J1-18 | PNSW | 18 | J2-18 | VBATT |

## Maintenance of Engine management system

Because of the EFI, there are many possibilities for the engine issues. In other word, one issue may be caused by the mechanical problem or the EFI components. And the diagnostic tools cannot 100% indicate the root cause. So this manual shows the way to dig out the root cause with the help of the diagnostic tools.

**Maintenance matters needing attention**

1) Do not disassemble the components arbitrarily. It may damage the components if the warter or the oil seep into the parts.

2) Turn the ignition off, before connect or disconnect the connectors.

3) Make sure the temperature of the ECU is below 80℃.

4) The fuel pressure is much high ( about 250kPa), so please do not disassemble the fuel pipe arbitrariliy. If have to, pleae release the pressure at first, and make sure the operation is dilivered in the ventilated environment by the the professional mantenance persons.

5) When disassmeble the fuel pump from the pump, make sure the power is off. Or it may casue the fire.

6) The fuel pump cannot work in air or water, it will shorten the service life. And the positive and negative connecters cannot be exchanged.

7) The ignition system check only could be delivered when it is nessasary. When check the spark plug out of the engine, if start the engine, please make sure the throttle is closed. Or too much unburned gasoline coming to the catalyst may damage the catalyst.

8) The idle speed is adjusted by the ECU. The idle pintle is not alowed to adjust.

9) The Positive and Negative of the battery cannot be reversed. It may damage the EFI components.

10) It is forbidden to remove the battery when the eninge is running.

11) Cannot messure the signal by pierce the harness.

## Tools

1) Multimeter: messure the voltage, the resistance and the harness connection.
2) Diagnostic tool: reading the malfcode, and engine parameters.
3) Oil pressure garge: messure the fuel pressure.
4) Cylinder pressure garge: messure the pressure garge.

## Maintenance depending on the malfcode.

**Description**

1) If the issure cannot repeat, the issure analysis may be wrong.
2) The multimeter below means the digital type. Pointer-type is forbidden.
3) If the malfcode shows the voltage is low, it means maybe the wire is short to ground. If the malfcode shows the voltage is high, it means maybe the wire is short to battery. If the malfcode shows the components signal abnormal, it means the wire is open or short to other wires.

**Diagnostic help:**

1) If the malfcode shows again after clearence, check whether the connector is connected well.
2) Do not ignore the affect of the engine maintenance situation, the cylinder pressure, and the mechanical ignition timing.
3) Change another ECU to do the test. If the malfcode disappears, the root cause is the ECU. If the malfcode is still there, then use the old ECU to do the test.

**DTC List**

| System or Component | DTC Number | DTC Description | Related Calibration |
|---|---|---|---|
| Manifold Absolute Pressure Sensor (MAP) | P0107 | MAP Circuit Low Voltage or Open | KsDGDM_MAP_ShortLow |
| | P0108 | MAP Circuit High Voltage | KsDGDM_MAP_ShortHigh |
| Intake Air Temperature Sensor (IAT) | P0112 | IAT Circuit Low Voltage | KsDGDM_IAT_ShortLow |
| | P0113 | IAT Circuit High Voltage or Open | KsDGDM_IAT_ShortHigh |
| Coolant/Oil Sensor | P0117 | Coolant/Oil Temperature Sensor Circuit Low Voltage | KsDGDM_CoolantShortLow |
| | P0118 | Coolant/Oil Temperature Sensor Circuit High Voltage or Open | KsDGDM_CoolantShortHigh |
| Throttle Position Sensor (TPS) | P0122 | TPS Circuit Low Voltage or Open | KsDGDM_TPS_ShortLow |
| | P0123 | TPS Circuit High Voltage | KsDGDM_TPS_ShortHigh |
| Oxygen Sensor | P0131 | O2S 1 Circuit Low Voltage | KsDGDM_O2_1_ShortLow |
| | P0132 | O2S 1 Circuit High Voltage | KsDGDM_O2_1_ShortHigh |
| Oxygen Sensor Heater | P0032 | O2S Heater Circuit High Voltage | KsDGDM_O2_1_HeaterShortHigh |
| | P0031 | O2S Heater Circuit Low Voltage | KsDGDM_O2_1_HeaterShortLow |
| Fuel Injector | P0201 | Injector 1 Circuit Malfunction | KsDGDM_INJ_CYL_A_Fault |
| | P0202 | Injector 2 Circuit Malfunction | KsDGDM_INJ_CYL_B_Fault |
| Fuel Pump Relay (FPR) | P0230 | FPR Coil Circuit Low Voltage or Open FPR | KsDGDM_FPP_CircuitShortLow |
| | P0232 | FPR Coil Circuit High Voltage FPR | KsDGDM_FPP_CircuitShortHigh |
| Crankshaft Position Sensor (CKP) | P0336 | CKP Sensor Noisy Signal | KsDGDM_CrankNoisySignal |
| | P0337 | CKP Sensor No Signal | KsDGDM_CrankNoSignal |
| Ignition Coil | P0351 | Cylinder 1 Ignition Coil Malfunction | KsDGDM_EST_A_Fault |
| | P0352 | Cylinder 2 Ignition Coil Malfunction | KsDGDM_EST_B_Fault |
| Idle Control System | P0505 | Idle Speed Control Error | KsDGDM_IdleControl |
| System Voltage | P0562 | System Voltage Low | KsDGDM_SysVoltLow |
| | P0563 | System Voltage High | KsDGDM_SysVoltHigh |
| MIL | P0650 | MIL Circuit Malfunction | KsDGDM_MIL_Circuit |
| Tachometer | P1693 | Tachometer Circuit Low Voltage | KsDGDM_TAC_Circuit_Low |
| | P1694 | Tachometer Circuit High Voltage | KsDGDM_TAC_Circuit_High |

**Malfcode：P0107**

Information：MAP Circuit Low Voltage or Open

| ITEM | OPERATION | RESULT | NEXT STEP |
|---|---|---|---|
| 1 | Connect the diagnostic tool, and ignition on. | | Next |
| 2 | Check the data of 'BARO'. Make sure whether it is about 100kPa (depending on where you are) | Yes | Step 5 |
| | | No | Next |
| 3 | Remove the connector, and use the multimeter to check whether the voltage between pin B and D is about 5V. | Yes | Setp 5 |
| | | No | Next |
| 4 | Check whether the following pins is short to ground: J2-11, J2-10, J2-16 of the ECU and pin A, D, B of the connector. | Yes | Check the harness |
| | | No | Next |
| 5 | Crank the engine to stay at idle. Check whether the MAP is abou 30-50kPa. Then go to WOT, check whether the MAP goes to about 90kPa. | Yes | Diagnotic help |
| | | No | Change the sensor |

**Malfcode：P0108**

Information：MAP Circuit High Voltage

| ITEM | OPERATION | RESULT | NEXT STEP |
|---|---|---|---|
| 1 | Connect the diagnostic tool, and ignition on. | | Next |
| 2 | Check the data of 'BARO'. Make sure whether it is about 100kPa (depending on where you are) | Yes | Step 5 |
| | | No | next |
| 3 | Remove the connector, and use the multimeter to check whether the voltage between pin B and D is about 5V. | Yes | Setp 5 |
| | | No | Next |
| 4 | Check whether the following pins is short to battery: J2-11, J2-10, J2-16 of the ECU and pin A, D, B of the connector. | Yes | Check the harness |
| | | No | Next |
| 5 | Crank the engine to stay at idle. Check whether the MAP is abou 30-50kPa. Then go to WOT, check whether the MAP goes to about 90kPa. | Yes | Diagnotic help |
| | | No | Change the sensor |

**Malfcode：P0112**

Information：IAT Circuit Low Voltage

| ITEM | OPERATION | RESULT | NEXT STEP |
|---|---|---|---|
| 1 | Connect the diagnostic tool, and ignition on. | | Next |
| 2 | check whether the data of ‘intake air temperature’ equals to the real intake air temperature. | Yes | Setp 5 |
| | | No | Next |
| 3 | Remove the connector, and use the multimeter to check whether the resistance between pin B and D is reasonable according to the temperature. | Yes | Step 5 |
| | | No | Next |
| 4 | Remove the connector and check whether the voltage between pin B and D is about 5V. | Yes | Next |
| | | No | Check harness |
| 5 | Check whether the following pins are short battery: J2-8, J2-10 of the ECU and pin C, D of the connector. | Yes | Change the harness |
| | | No | Next |
| 6 | Crank the engine and stay idle. Check whether the ‘intake air temperature’ goes up when the engine temperature goes up. | Yes | Help |
| | | No | Change the sensor. |

**Malfcode：P0113**

Information：IAT Circuit High Voltage

| ITEM | OPERATION | RESULT | NEXT STEP |
|---|---|---|---|
| 1 | Connect the diagnostic tool, and ignition on. | | Next |
| 2 | check whether the data of ‘intake air temperature’ equals to the real intake air temperature. | Yes | Setp 5 |
| | | No | Next |
| 3 | Remove the connector, and use the multimeter to check whether the resistance between pin B and D is reasonable according to the temperature. | Yes | Step 5 |
| | | No | Next |
| 4 | Remove the connector and check whether the voltage between pin B and D is about 5V. | Yes | Next |
| | | No | Check harness |
| 5 | Check whether the following pins are short to ground or open: J2-8, J2-10 of the ECU and pin C, D of the connector. | Yes | Change the harness |
| | | No | Next |
| 6 | Crank the engine and stay idle. Check whether the ‘intake air temperature’ goes up when the engine temperature goes up. | Yes | Help |
| | | No | Change the sensor. |

**Malfcode：P0117**

Information：Coolant/Oil Temperature Sensor Circuit Low Voltage

| ITEM | OPERATION | RESULT | NEXT STEP |
|---|---|---|---|
| 1 | Connect the diagnostic tool, and ignition on. | | Next |
| 2 | check whether the data of ‘engine temperature’ equals to the real temperature. | Yes | Step 5 |
| | | No | Next |
| 3 | Remove the connector and use the multimeter to check whether the resistance between pin A and C of the sensor is reasonable according to the temperature. | Yes | Step 5 |
| | | No | Next |
| 4 | Use the multimeter to measure whether the voltage between A and C is about 5V. | Yes | Next |
| | | No | Check the harness |
| 5 | check whether the following pins are short to gound or open: J2-10, J2-14 of the ECU and pin C and D of the sensor. | Yes | Harness issue |
| | | No | Next |
| 6 | crank the engine and stay idle. Check whether the ‘engine temperture’ goes high when engine get warm. | Yes | Help |
| | | No | Change the sensor |

**Malfcode：P0118**

Information：Coolant/Oil Temperature Sensor Circuit High Voltage or Open

| ITEM | OPERATION | RESULT | NEXT STEP |
|---|---|---|---|
| 1 | Connect the diagnostic tool, and ignition on. | | Next |
| 2 | check whether the data of ‘engine temperature’ equals to the real temperature. | Yes | Step 5 |
| | | No | Next |
| 3 | Remove the connector and use the multimeter to check whether the resistance between pin A and C of the sensor is reasonable according to the temperature. | Yes | Step 5 |
| | | No | Next |
| 4 | Use the multimeter to measure whether the voltage between A and C is about 5V. | Yes | Next |
| | | No | Check the harness |
| 5 | check whether the following pins are short to battery or open: J2-10, J2-14 of the ECU and pin C and D of the sensor. | Yes | Harness issue |
| | | No | Next |
| 6 | crank the engine and stay idle. Check whether the ‘engine temperture’ goes high when engine get warm. | Yes | Help |
| | | No | Change the sensor |

**Malfcode：P0122**

Information：TPS Circuit Low Voltage or Open

| ITEM | OPERATION | RESULT | NEXT STEP |
|---|---|---|---|
| 1 | Connect the diagnostic tool, and ignition on. | | Next |
| 2 | Check whether the data of 'Throttle opening' is bettwen 0%-1%. | Yes | Step 5 |
| | | No | Next |
| 3 | Open the throttle to 100% slowly, check whether the data of 'throttle opening' goes to between 90%-100%. | Yes | Step 5 |
| | | No | Next |
| 4 | Repeat Step 3, check whether the data jumps when open the throttle slowly. | Yes | Change the sensor |
| | | No | Next |
| 5 | Remove the connector and check whether the following pins are short to gound or open: J2-12, J2-16 of ECU and pin A and C of the sensor. | Yes | Harness issue |
| | | No | Next |
| 6 | Use multimeter to check whether the voltage between pin A and B is about 5V. | Yes | Help |
| | | No | Step 5 |

**Malfcode：P0123**

Information：TPS Circuit High Voltage

| ITEM | OPERATION | RESULT | NEXT STEP |
|---|---|---|---|
| 1 | Connect the diagnostic tool, and ignition on. | | Next |
| 2 | Check whether the data of 'Throttle opening' is between 0%-1%. | Yes | Step 5 |
| | | No | Next |
| 3 | Open the throttle to 100% slowly, check whether the data of 'throttle opening' goes to between 90%-100%. | Yes | Step 5 |
| | | No | Next |
| 4 | Repeat Step 3, check whether the data jumps when open the throttle slowly | Yes | Change the sensor |
| | | No | Next |
| 5 | Remove the connector and check whether the following pins are short to battery: J2-12, J2-16 of ECU and pin A and C of the sensor. | Yes | Harness issue |
| | | No | Next |
| 6 | Use multimeter to check whether the voltage between pin A and B is about 5V. | Yes | Help |
| | | No | Step 5 |

**Malfcode：P0131/P0132**

Information：O2S 1 Circuit Low/High Voltage

| ITEM | OPERATION | RESULT | NEXT STEP |
|---|---|---|---|
| 1 | Connect the diagnostic tool, and ignition on. | | Next |
| 2 | Use multimeter to check whether the connection between pin B of the oxygen sensor and pin J2-17 of the ECU is open, and whether the pin B of sensor is short to pin A. | Yes | Harness issue |
| | | No | Next |
| 3 | Crank the engine and stay idle. Whent the engine gets warm, use multimeter to check whether the voltage between pin A and B keeps jumping between 100-900mV. | Yes | Help |
| | | No | Next |
| 4 | A、Emission pipe: block/leakage or not.<br>B、Injector: leakage or not<br>C、Fuel pressure too big or not<br>D、 Valve clearance is to small or not | Yes | Engine maintenance |
| | | No | Change sensor |

**Malfcode：P0201**

Information：Injector 1 Circuit Malfunction

| ITEM | OPERATION | RESULT | NEXT STEP |
|---|---|---|---|
| 1 | Connect the diagnostic tool, and ignition on. | | Next |
| 2 | Remove the conneter of injecor 1, use multimeter to check whether the voltage of Pin A is about 12V. | Yes | Step 4 |
| | | No | Next |
| 3 | Check whether the connection between pin A and the main power relay is short to gound or open. | Yes | Harness issue |
| | | No | Next |
| 4 | Use multimeter to measure whether the resistance between pin A and B of the injecotr is about 10-14 Ω @ 20℃ | No | Change the injector |
| | | Yes | Next |
| 5 | Use the multimeter to check whether the voltage of Pin B is about 12V. | Yes | Help |
| | | No | Next |
| 6 | Check whether the connection between pin B of the injector and J2-05 of the ECU is open or short to battery/ground. | Yes | Harness issue |
| | | No | Help |

**Malfcode：P0230/P0232**

Information：FPR Coil Circuit Low/High Voltage or Open

| ITEM | OPERATION | RESULT | NEXT STEP |
|---|---|---|---|
| 1 | Connect the diagnostic tool, and ignition off | | next |
| 2 | Wait about 30s. Remove the fuel pump realy, ignition on. Check whether voltage of the relay feeder ear is about 12V | Yes | Change the pump |
| | | No | Next |
| 3 | Check whether the feeder ear is short to ground or open. | Yes | Harness issue |
| | | No | Help |

**Malfcode：P0351**

Information：Cylinder 1 Ignition Coil Malfunction

| ITEM | OPERATION | RESULT | NEXT STEP |
|---|---|---|---|
| 1 | Connect the diagnostic tool, and ignition on. | | next |
| 2 | Remove the connector and check whether the voltage of pin + is about 12V. | Yes | Step 4 |
| | | No | Next |
| 3 | Check whether the connection of the pin + and main power relay is open or short to ground. | Yes | Harness issue |
| | | No | Next |
| 4 | Use multimeter to check wheter the resistance of the two coil pins is 0.5-0.65Ω @20℃ | Yes | Change coil |
| | | No | Next |
| 5 | Use multimeter to check whether the voltage of pin B is about 12V. | Yes | Help |
| | | No | Next |
| 6 | Check whether the connection of pin 2 of the coil and J2-01 of ECU is open or shor to battery/ground. | Yes | Harness issue |
| | | No | Help |

**Malfcode：P0505**

Information：Idle Speed Control Error

| ITEM | OPERATION | RESULT | NEXT STEP |
|---|---|---|---|
| 1 | Connect the diagnostic tool, and ignition off | | next |
| 2 | Remove the connector. Use multimeter to check whether the resistance between pin A and pin D, pin B and pin C is about 53±5.3Ω | Yes | Next |
| | | No | Change stepper motor |
| 3 | Check whether the 4 wires are short to battery/ground or open. | Yes | Harness issue |
| | | No | Help |

## Maintenance depending on the performance.

**Before issue analysis, please check:**

1) The MIL works well.

2) Clear the history malfcode.

3) When the malfcode comes again, note the condictions.

**Check the appearance**

1) Whether there is leakage of the fuel pipe or not.

2) Whether there is block/leakage or damage of the intake pipe.

3) Ageing level of the high-voltage cable.

4) Whether the ground connection is strong enough.

5) All the connectors connected well.

**Note: if any item above exists, please do the fix it at first before issue analysis.**

**Diagnostic Help：**

1) Make sure there is no any issue record of the engine.

2) Make sure the issue could repeat.

3) Have checked follow the instructions above and no cause found.

4) Do not ignore the maintenance situation, cylinder pressure, mechanical timing and fuel quality.

5) Change the ECU and repeat the test, if the issue is gone, then the root cause is the ECU. Or change the old one back to check the root cause.

| ITEM | OPERATION | RESULT | NEXT STEP |
|---|---|---|---|
| Engine cannot start | Check whether the voltage of the battery is around 8-12V. | Yes | Next |
| | | No | Change the battery. |
| | Crank the engine, and check whether the voltage is above 8V. | Yes | Next |
| | | No | Change the battery. |
| | Check whether the start motor working well or not. | Yes | Next |
| | | No | Change the start motor. |
| | If the issue only occurs in winter, check the oil and gear box oil. | Yes | Change the oil |
| | | No | Next |
| | Check whether the engine rotation resistance is too big or not. | Yes | Check the enigne |
| | | No | Help |
| | Check wether the fuel pump pressure is about 250kPa at idle. | Yes | Next |
| | | No | Check the pump. |
| | Check whether the 'RMP' data on the diagnostic tool shows the real engine RPM. | Yes | Next |
| | | No | Check the crank sensor. |
| | Pull out the spark plug, check whether the spark over is normal. | Yes | Next |
| | | No | Check the ignition system |
| | Check whether the cylinder pressure is normal. | Yes | Engine is good. |
| | | No | Check the engine |
| Start Difficult | Check wether the fuel pump pressure is about 250kPa at idle. | Yes | Next |
| | | No | Check the pump. |
| | Pull out the spark plug, check whether the spark over is normal. | Yes | Next |
| | | No | Check the ignition system |
| | Remove the connector of the engine temperature sensor, and check whether the engine start well. | Yes | Check the engine temperature sensor |
| | | No | Next |
| | With a little bigger throttle, check whether the engine starts well. | Yes | Clean the throttle body and bypass channel. |
| | | No | Next |
| | Pull out the injector, and crank the engine. Check whether the injection is normal. | Yes | Next |
| | | No | Clean or change the injector. |

| | | | |
|---|---|---|---|
| | Pull out the spark plug, check whether it is wet or not | Yes | dry the plug and combustion chamber. |
| | | No | Next |
| | Check whether the cylinder pressure is normal or not | Yes | Engine is good |
| | | No | Check the engine |
| Unstable idle | Check whether the air filter is blocked and whether the intake pipe leaks. | Yes | Intake system maintenance |
| | | No | Next |
| | Whether there is carbon deposit at the throttle body and bypass channel. | Yes | Clean the TB |
| | | No | Next |
| | Check whether the IACV works well | Yes | Next |
| | | No | Check the IACV |
| | Check whether the fuel pressure is about 250kPa. | Yes | Next |
| | | No | Check the pump |
| | Check whether the injector is blocked. | Yes | Clean or change the injector |
| | | No | Next |
| | Make sue using the right type spark plug | Yes | Next |
| | | No | Change the spark plug |
| | Check whether the cylinder pressure is normal | Yes | Next |
| | | No | Check the engine |
| | Remove the engine temperature sensor, and check whether the engine works well | Yes | Change the senor |
| | | No | Next |
| | Remove the TPS, check whether the engine works well | Yes | Change the sensor |
| | | No | Help |
| High idle | Check whether the throttle cable is stuck | Yes | Adjust the cable |
| | | No | Next |
| | Check whether the idle pimple has been adjusted | Yes | Change the TB |
| | | No | Next |
| | Check whether the is any leakage of the intake pipe. | Yes | Maintenance |
| | | No | Next |
| | Check whether the IACV works well | Yes | Next |

| | | | |
|---|---|---|---|
| | | No | Change IACV |
| | Remove the engine temperature sensor and check whether the engine works well | Yes | Help |
| | | No | Change the sensor |
| Acceleration gets worse | Check whether the air filter is blocked and whether the intake pipe leaks. | Yes | Intake system maintenance |
| | | No | Next |
| | Check whether the fuel pressure is about 250kPa. | Yes | Next |
| | | No | Check the pump |
| | Pull out the spark plug, check whether it is wet or not | Yes | dry the plug and combustion chamber. |
| | | No | Next |
| | Check whether the TMAP, TPS and the connections works well. | Yes | Next |
| | | No | Change the sensor or harness maintenance |
| | Check whether the injector is blocked. | Yes | Clean or change the injector |
| | | No | Next |
| | Check the typ and the clearance of the spark plug. | Yes | Next |
| | | No | Change the sprk plug |
| | Check whether the cylinder pressure is normal | Yes | Next |
| | | No | Check the engine |
| | Check whether the exhaust pipe is blocked or not | No | help |
| | | Yes | maintenance |
| Backfire | Pull out the spark plug, check whether the spark over is normal. | Yes | Next |
| | | No | Check the ignition system |
| | Check whether the timing is right | Yes | Next |
| | | No | Adjust the timing |
| | Check whether there is leakage of the valve | Yes | Adjust the valve |
| | | No | Next |
| | Check whether the injector is blocked. | Yes | Clean or change the injector |
| | | No | Next |
| | Check whether the oxygen sensor works well | Yes | Help |
| | | No | Change the sensor |

| | | | |
|---|---|---|---|
| Miss fire | Pull out the spark plug, check whether the spark over is normal. | Yes | Next |
| | | No | Check the ignition system |
| | Check whether the timing is right | Yes | Next |
| | | No | Adjust the timing |
| | Check the typ and the clearance of the spark plug. | Yes | Help |
| | | No | Change the spark plug |
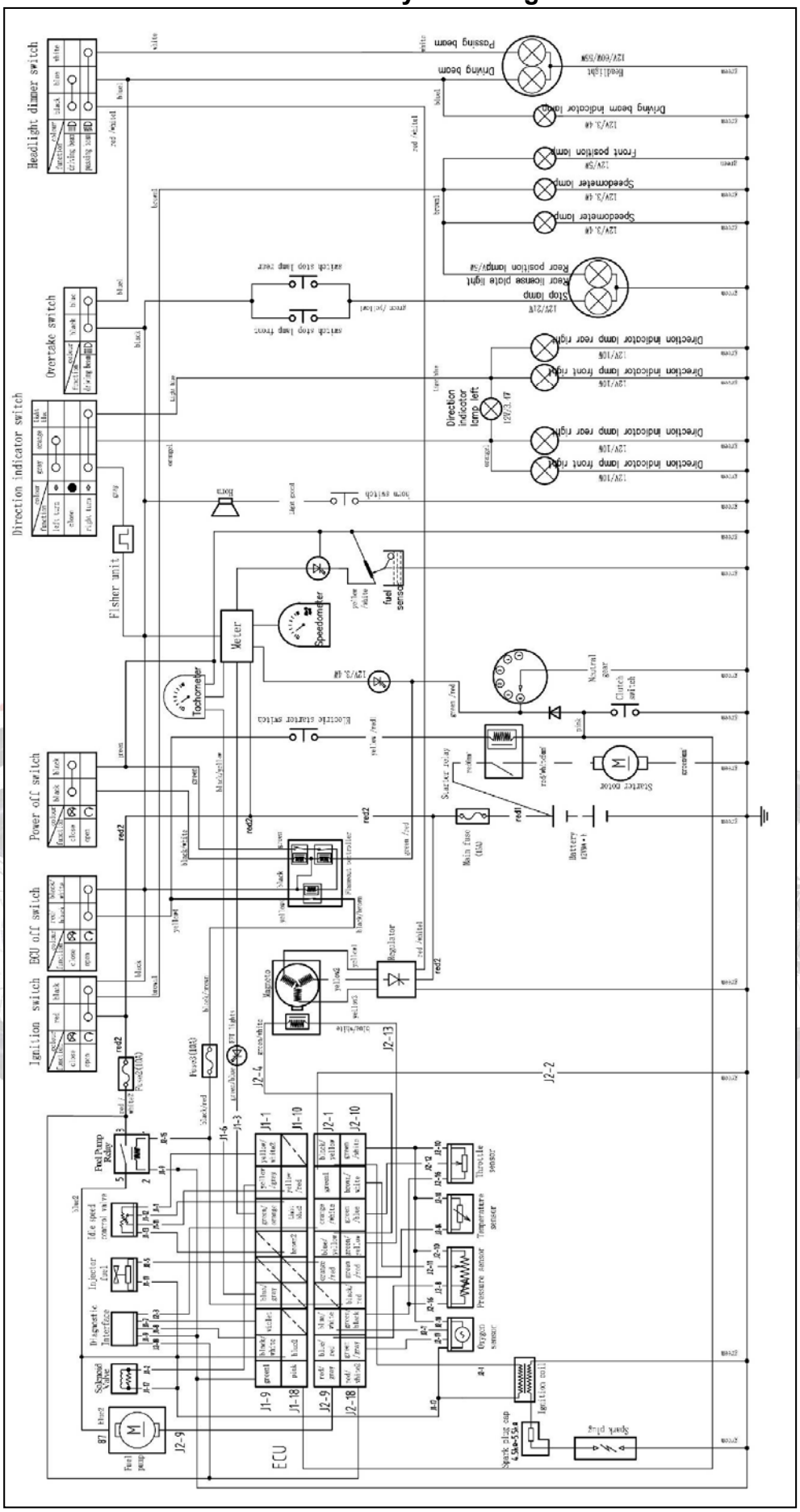
# 19. Electrical System Diagram